ICE COBOTICS

www.icecobotics.com

OPERATOR & PATRS MANUAL

AUTOMATIC SCRUBBER

i18B
i18C

8019009
REV.09(10-2026)

READ OPERATOR MANUAL CAREFULLY!

IMPORTANT: To ensure full warranty protection, please fill out & return your warranty card.

Please fill out at time of installation for future reference.

Model No. _____

Serial No. _____

Machine Options _____

Sales Rep. _____

Sales Rep. Phone No. _____

Customer ID Number _____

Installation Date _____

HOW TO ORDER PARTS

Only use ICE Cobotics Company supplied or equivalent parts. Parts and supplies may be ordered online,by phone, by fax or by mail.

1. Identify the machine model.
2. Identify the machine serial number from the data label.
3. Ensure the proper serial number is used from the parts list.
4. Identify the part number and quantity.
   Do not order by page or reference numbers.
5. Provide your name, company name, customer ID number,billing and shipping address, phone number and purchase order number.

PROTECT THE ENVIRONMENT

Please dispose of packaging materials,old machine components such as batteries, hazardous fluids, including antifreeze and oil, in an environmentally safe way according to local waste disposal regulations.

Always remember to recycle.

ICE Cobotics (GuangDdong) Company Limited
XiangShi Road LiaoBu DongGuan GuangDong China
Tel: 0769 - 81869000
Fax:0769 - 81863000

Specifications and parts are subject to change without notice.

TABLE OF CONTENTS

SAFETY PRECAUTIONS....4
MACHINE COMPONENTS....6
MACHINE SETUP & INSTALLATION....7
MACHINE OPERATION....8
WHILE OPERATING MACHINE....8
TANK DRAINING....8
PREVENTATIVE MAINTENANCE....10
BASIC TROUBLESHOOTING....12
TECHNICAL SPECIFICATION....13
PARTS LIST....14-35
WEAR & TEAR PARTS LIST....36
WIRING DIAGRAM 37-38

SAFETY PRECAUTIONS(FOR i18B)

This machine is intended for commercial use. It is designed exclusively to scrub hard floors in an indoor environment and is not constructed for any other use. Only use recommended accessories.

All operators shall read, understand and exercise the following safety precautions:

1. **Do not operate machine:**
   - **Unless trained and authorized.**
   - **Unless you have read and understand the operators manual.**
   - **In flammable or explosive areas.**
   - **If not in proper operating condition.**
   - **In outdoors areas.**

2. **Before starting machine:**
   - **Make sure all safety devices are in place and operate properly.**

3. **When using machine:**
   - **Go slow on inclines and slippery surfaces.**
   - **Follow all safety guidelines.**
   - **Report and fix any damage to machine prior to operating it.**
   - **Never allow children to play on or around the machine.**
   - **Do not operate on inclines that exceed 2% (3°).**

4. **Before leaving or servicing machine:**
   - **Stop on level surface.**
   - **Turn off machine.**

5. **When servicing machine:**
   - **Read operators manual thoroughly prior to operating or servicing this machine.**
   - **Use manufacturer supplied or approved replacement parts.**
   - **Secure machine with wheel blocks prior to jacking the machine up.**
   - **Use approved jack or hoist to safely elevate the machine.**
   - **Disconnect batteries prior to working on machine.**
   - **Wear gloves when handling batteries or battery cables.**
   - **Avoid any contact with battery acid.**
   - **Avoid moving parts. Do not wear loose fitting clothing while servicing machine.**

WARNING:Batteries may emit hydrogen gas. Explosion or fire can result from hydrogen gas. Keep sparks and open flames away! Keep battery compartment open when charging(except maintenance-free batteries).

WARNING: Flammable materials can cause an explosion or fire. Do not use flammable materials in tanks.

WARNING: Flammable materials or reactive metals can cause explosion or fire. Do not pick up.

SAFETY PRECAUTIONS(FOR i18C)

WARNING:Carefully read and understand this manual before operating this machine.This machine must be grounded!

This scrubbing machine shall be grounded while in use to protect the operator from electric shock.Grounding provides a path of least resistance for electric current. This machine is equipped with a cord having an equipment-grounding conductor and grounding plug. The plug must be plugged into an appropriate outlet that is properly installed and grounded in accordance with all local codes and ordinances. Do not remove the ground pin under any circumstances.

This machine is for use on a nominal 110-volt circuit and has a grounding plug that resembles the plug illustrated in Figure. Make sure that the machine is connected to an outlet having the same configuration as the plug. No adapter should be used with this machine.

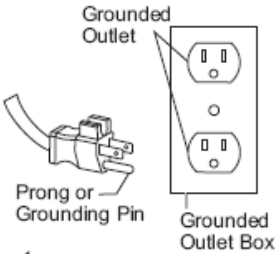

This machine is intended for commercial use. It is constructed for use in an indoor environment and is nor intended for any other use. Use only recommended accessories.

1. Do not operate machine:
- Unless trained and authorized.
- In flammable or explosive areas.
- With a damaged cord or plug
- If not in proper operating condition.
- Unless you have read and understood the operator's manual.
- With the use of extension cords.
- In outdoor areas and standing water.

2. Before operating machine:
- Make sure all safety devices are in place and operating properly.

3. When using machine:
- Do not run machine over cord.
- Do not pull cord around sharp edges or corners.
- Do not handle plug with wet hands.
- Report machine damage or fault operation immediately.
- Do not pull machine by cord or plug.
- Do not unplug by pulling on the cord.
- Do not stretch cord.
- Keep cord away from heated surfaces.

4. Before leaving or servicing machine:
- Turn off machine.
- Unplug cord from outlet.

5. When servicing machine:
- Unplug cord from outlet.
- Use manufacturer supplied or approved replacement parts.

WARNING:To avoid electrical shock,please replace the power cord immediately if any damage is being detected. The replacement must be performed only by an authorized person or by our customer service center.

WARNING:Flammable materials can cause explosion or fire. Do not use flammable materials in tanks or pick them up.

MACHINE COMPONENTS

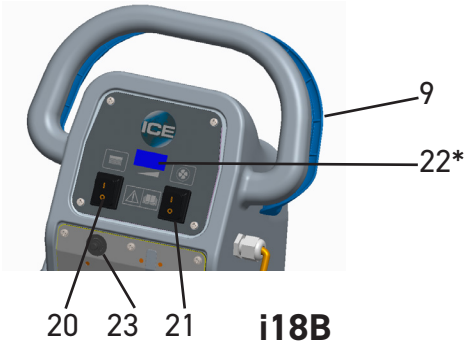

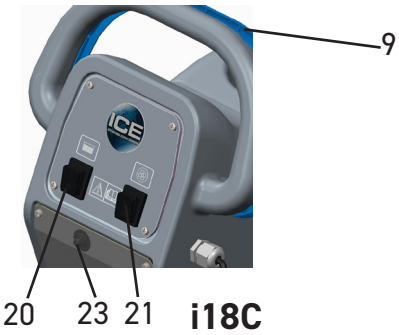

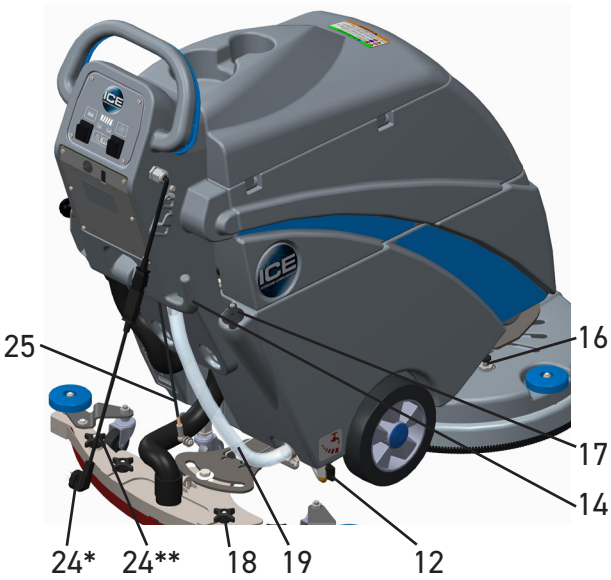

1. Brush cover
2. Brush
3. Cover tank
4. Recovery tank
5. Solution tank
6. 8" wheels
7. Squeegee
8. Control box
9. Trigger
10. Adjusting handle
11. Water filter
12. Ball valve
13. Squeegee lifting handle
14. Power cord hook
15. Brush/pad driving hub
16. Brush plunger
17. Plug of water filling port
18. Knob
19. Clear tube
20. Switch for brush motor
21. Switch for vacuum motor
22*. Battey monitor
23. Circuit breaker
24*. Charger power cord
24**. Power cord
25. Adjustable wheel

*** : only for i18B **:only for i18C**

MACHINE SET UP & INSTALLATION

UNPACK MACHINE:

Be sure and check packing carton for any damage. Immediately report any damage to carrier. Be careful not to let machine vibrate while carrying, Check contents of package to ensure that the following items are included: Machine, squeegee assembly, brush/pad driver, charger cord.

MACHINE SET UP & PRE-OPERATION CHECKS:

1) Sweep the outside of the machine.
2) Check battery meter to make sure batteries are fully charged (see battery charging, only for i18B).
3) Check that squeegee and brush / pad is properly installed.
4)Theforwardspeed of machine can be controlled by turning the handle(10). Turn the handle clockwise to speed up machine. or turn the handle anticlockwise to slow down machine.
5)Makesuretheworkingsurfacecan support the machine weight, thegradient of the floor can't exceed the limit that machine allowed(2%).

INSTALLING PAD DRIVER OR BRUSH:

1) Turn off machine.
2)Tiltthemachine backwards,line upthe driving hub with the hole of brush or pad driver, make sure the three blocks are fitted into the three slots of the drive hub.
*If a pad driver is being used, the appropriate pad should be attached to the pad driver first.
3)Pushtheplungerwhichon the brush cover to prevent the driving hub from rotating,then spin the brush/pad clockwise with your another hand till the clip clamp the block on the brush/pad.

INSTALLING THE SQUEEGEE:

1)Loosen the twoknobs(18) on the squeegee and slide the squeegee into the slots at the rear of the squeegee bracket. (the wheels on the squeegee point to the machine.)
2) Tighten the knobs securely.

FILLING THE SOLUTION TANK:

1) The fill port is located at the rear of machine,pull the plug out of the hole.
2) Fill solution tank with water. (use a hose which link to a water faucet,water temperature should not exceed 50° C) The clear tube(19) in the back right of the machine has gallon markers to help determine the water level in the solution tank(5).
*Depending on the dirty level of the ground, add the proper amount of detergent into the solution tank.

WARNING:Do not put any flammable materials into solution tank. This can cause an explosion or a fire. Only use recommended cleaning chemicals. Contact your janitorial supply distributor for recommendations on proper chemicals.

MACHINE OPERATION

WARNING:Do not operate machine unless you have read and understand this manual.

1) Lower squeegee assembly to the floor by spin the squeegee lifting handle(13).
2) Turn brush motor switch(20) to “on” position.
3) Turn vacuum motor switch(21) to “on” position.
4) Rotate the ball valve(12) handle to vertical position. Solution will not begin to flow until the operating triggers (9) are pulled.
5)To begins crubbing,pull on the blue operating trigger(9), when this triggers is pulled, the pad driver will begin to spin and the solution will begin to flow.
6) Begin scrubbing by moving the machine forward.
7) Adjust solution flow by adjusting the position of ball valve knob.

WARNING:Do not keep the machine in the same position with the pad / brush spinning, or you might damage the floor.

WHILE OPERATING MACHINE

1)Occasionally open the cover tank(3) to see if there is any foam build-up.If excessive foam is found, add defoamer to the recovery tank.

WARNING:Foam must not enter the float shut-off screen, or damage can occur to the vacuum motor. Foam will not activate the machine's float shut-off device.

2)Occasionally view the clear tube at the back left of the machineto check thea mount of cleaning solutionthatis left in themachine. If the squeegee assembly leaves streaks on the floor, raise the squeegee off the floor and wipe the blades down with a damp cloth.

WARNING:Do not use your fingers to wipe or remove debris from the blades, as injury may occur.

When the solution tank runs empty, turn off the brush switch and ball valve of solution tank. Keep the squeegee down and continue to vacuum until all the dirty water is picked up.

TANK DRAINING

1) Turn the switches on the control panel to “off ” position.
2) Raise the squeegee, transport machine to approved area for draining tank(s).

WARNING:Any time scrubbing is completed, or when refilling solution tank, the recovery tank should be drained and cleaned.

recovery tank is not drained when the solution tank has been refilled, foam or water may enter the float shut-off mechanism and cause damage to the vacuum motor.

DRAINING THE RECOVERY (DIRTY) TANK

1) Remove the drain hose from the holder, and place the drain hose over the floor drain. Twist off the drain hose plug to begin the draining process.
2) Clean the recovery tank after every use. Use a fresh water hose to rinse out the recovery tank. Be careful not to spray water into the float shut-off mechanism.

WARNING:If you are storing the machine for any period of time, keep the cover tank open so the tank can dry completely and smell fresh.

DRAINING THE SOLUTION (CLEAN) TANK

WARNING:Any time scrubbing operation is completed, the solution tank should be drained and cleaned.

1) Pull down on the clear tube (back left of the machine) to remove it from the hose barb. This will allow the solution to flow freely into a bucket or floor drain.
2) Rinse the solution tank with clean water after every use. This will help prevent chemical buildup and clogging of the solution lines.
3) Once tank is rinsed, flushed and drained, reconnect the clear tube to the hose barb. Be sure the tube is pushed all the way up on the hose barb.
4) Screw off the cover of the water filter(11) to compeletly exhaust the tank and check the filter screen, clean it up if necessary.
5) Screw up the cover of the water filter(11),bu sure to install the screen and the "O" ring in the correct position.

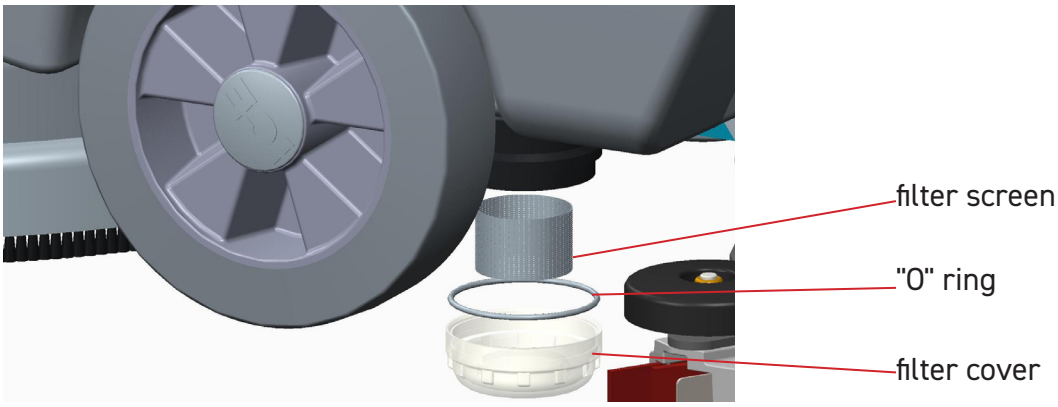

BATTERY CHARGING (ONLY FOR i18B)

Each machine was equipped with on-board charger and batteries, please use oringinal parts only.

WARNNING: Fire or explosion hazard. Batteries may emit hydrogen gas. Keep sparks and open flame away. Keep battery compartment open when charging.

NOTE: Use only approved chargers with the following specifications:
- **Automatic shut off circuit.**
- **Deep cycle charging.**
- **Output current of 8-15 Amps.**
- **Output voltage of 24 volts.**
- **Automatic shut off circuit.**

Battery Indicator Description:

Battery Voltage

Battery Level

Battery Indicator Description While Charging:

Charging Duration Statistics

1) Place the machine in a well ventilated area.
2) Turn the machine off.
3) If charging wet (lead acid) batteries, check the fluid level before charging.
4) Connect the charger's AC power supply cord to a properly grounded receptacle.
5) The charger will automatically begin to charge and will automatically shut off once the batteries are fully charged.
6) Upon completion of charging, disconnect the AC power supply cord.

NOTE: The charging status can be seen through the lights behind the transparent panel:
Yellow light on: Normal charging
Green light flash: 80% charged
Green light on: Fully charged, batteries ready for use.
Yellow lights flash: No batteries or incorrect wiring.

PREVENTATIVE MAINTENANCE

WARNNING: Before performing any maintenance on the machine, be sure that the power is turned off, or the batteries are disconnected!

WARNNING: Repairs are to be completed by authorized service centers only. Any repairs completed by unauthorized persons will avoid the warranty.

DAILY MAINTENANCE

1) Remove pad driver / brush and clean with approved cleaner.
2) Drain recovery and solution tanks completely and rinse out with clean water. Visually check the recovery tank for debris and clean out as necessary.
3) Raise squeegee assembly off floor and wipe it down with a damp towel. Be sure to store the squeegee in the up position.
4) Remove the float shut-off assembly and rinse it out with clean water.
5) Clean machine with an approved cleaner and a damp towel. Don't spray water to clean the outside of machine to avoid damage to motor and wiring.
6) Unplug vacuum motor from power source and hose cuff & remove the drain hose from the holder prior to removing the recovery tank when performing maintenance.
7) Check the condition of the squeegee blade wiping edge, rotate blade or replace it if worn.

MONTHLY MAINTENANCE

1) Clean the battery tops to prevent corrosion (only for i18B).
2) Check for loose battery cable connections (only for i18B).
3) Inspect and clean the recovery tank cover seal. Replace it if damaged.
4) Lubricate all grease points and pivot points with silicon spay and approved grease.
5) Check the machine for loose nuts and bolts.
6) Check the machine for leaks.

MOTOR MAINTENANCE

1) Contact your local ICE Distributor for any motor maintenance.
2) Check the motor brushes every 250 hours, Replace the brushes when they are worn to a length of 10mm or less.

BATTERY MAINTENANCE (ONLY FOR i18B)

WARNNING: Batteries may emit hydrogen gas and an explosion or fire can result. Keep sparks and fire away from batteries at all times.

WARNNING: Whenever servicing batteries, be sure to wear protective gloves. Avoid contact with battery acid at all times.

Note: For the best machine performance, keep batteries charged at all times.Do not let them sit in a discharged condition.

1) Always follow the battery charging direction as outlined in the BATTERY CHARGING section of this manual.
2) Keep battery tops and terminals free from corrosion. A strong solutin of baking soda and water is the best way to keep the batteries corrosion free. DO NOT ALLOW THE BAKING SODA / WATER SOLUTION TO ENTER THE BATTERY CELLS.
3) Use a wire brush with the baking soda solution to properly clean the battery posts and connections.
4) Check battery connections for wear and loose terminals. Replace them if necessary.

MACHINE STORAGE

1) Always store the machine indoors and in its upright position.
2) Always store the machine in a dry area.
3) Always take off the pad driver / brush before storage.
4) Always store the machine with the squeegee assembly raised off the floor.
5) If storing in an area which may reach freezing temperatures, be sure to drain all fluids from the machine prior to storage(include the filter). Any damage caused by freezing temperatures will not be covered by the warranty.
6) Drain the recovery tank and keep the cover tank open so that it can "breathe" during storage.
7) Drain the solution tank of all fluid.

BASIC TROUBLESHOOTING

PROBLEM	CAUSE	SOLUTION
No Power	The wiring not connected correctly or bad wiring	Check the wiring or contact ICE Distributor
	Bad brush motor	Contact ICE Distributor
	Carbon brushes worn out	Contact ICE Distributor
Vacuum motor does not run	The wiring not connected correctly or bad wiring	Check the wiring or contact ICE Distributor
	Bad vacuum motor	Contact ICE Distributor
	Carbon brushes worn out	Contact ICE Distributor
Little or no solution flow	Bad ball valve	Contact ICE Distributor
	Bad solution valve	Contact ICE Distributor
	Ball valve position in need of adjustment	When ball valve is in horizontal position,the amount of solution flow is maximum.
Poor water pick up	Squeegee clogged	Clean debris off squeegee with a damp towel
	Squeegee blades worn	Install new squeegee blades
	Squeegee not mounted correctly	Confirm that the squeegee assembly is securely fastened to the machine and not loose fitting.
	Vacuum hoses have a hole or are loose	Check hose connections and make sure they are firm. Replace hose if damaged.
	Vacuum hose may be clogged	Check hose for debris and remove any clog.
	Drain hose stopper is loose	Tighten drain plug.
	Vacuum motor is loose	Tighten vac motor mounting screws. Do not over tighten or damage will occur.
	cover tank is loose	Confirm the cover tank is securely in its place.
	Recovery tank is full	Drain recovery tank
	Float shut off is clogged	Remove float shut off from inside recovery tank and remove any debris
short runtime*	Low battery charge	Fully recharge batteries
	Defective batteries	Replace batteries
	Batteries need maintenance	See BATTERY MAINTENANCE
	Faulty battery charger	Repair or replace battery charger

* ONLY FOR i18B

TECHNICAL SPECIFICATION

ITEM	i18B	i18C
Working Width	18in / 450mm	
Squeegee Width	30in / 762mm	
Productivity rate	16145 ft^2h / 1500m^2h	12915 ft^2h / 1200m^2h
Brush Dia.	18in / 450mm	
Brush Speed	180rpm	
Max Pad Pressure	55lbs / 25kg	
Voltage	24VDC	120VAC
Brush Motor	0.75hp / 550W	
Vacuum Motor	0.7hp / 500W	
Batteries	2-12V, 85AH @20hr	N/A
Solution Tank Capacity	9.25Gal / 35L	
Recovery Tank Capacity	10.57Gal / 40L	
Machine Weight (w/o batteries)	138lbs / 62.5kg	
Batteries Weight	110lbs / 50kg	N/A
Machine Length	45.87in / 1165mm	
Machine Height	40.35 in / 1025mm	
Machine Width	20.5in / 520mm	
Power cord Length	N/A	82ft / 25m
Charger cord length	8.2ft / 2.5m	8.2ft / 2.5m
Max Gradient	2%	
Type of Drive	Brush assisted	
Noise Level	70 dB	
WATER LIFT - AIR FLOW	45 IN.H2O	

RECOVERY TANK GROUP

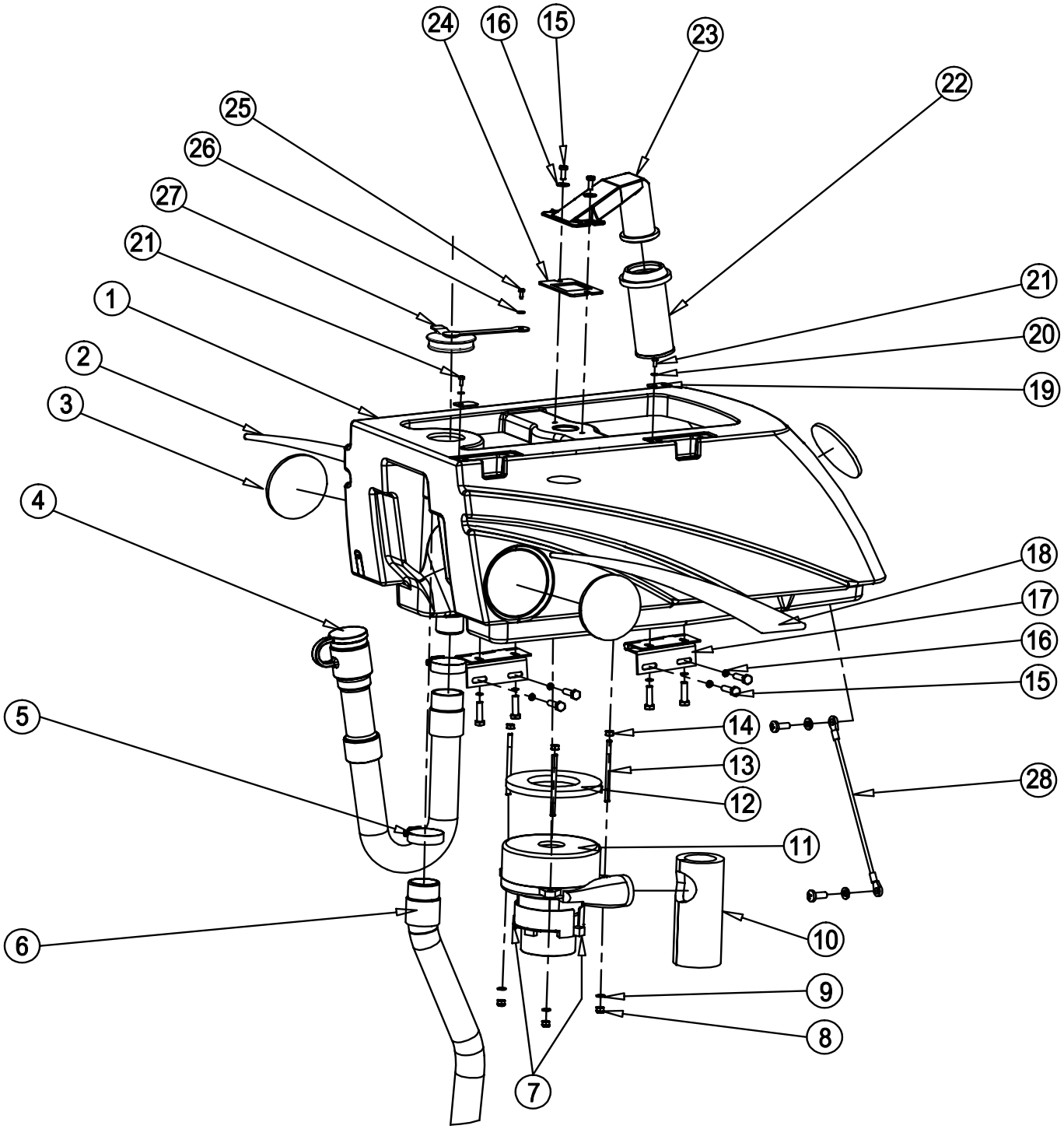

RECOVERY TANK GROUP

DIA NO.	PART NUMBER	DESCRIPTION	SERIAL NUMBER	NO. REQ'D
1	~~8011001~~	~~RECOVERY TANK~~	60003100364~60003100853 50010100124~50010100713	1
	8016001	RECOVERY TANK	60003100945~60012103001~ 50010100714~51010101228~	1
2	8011011	DECAL,LEFT		1
3	4010316	ICE LOGO		3
4	~~8131030~~	~~DRAIN HOSE~~	60003100958~60012102302 50010100724~51010101128	1
	8131031	DRAIN HOSE	60012102343~ 51010101129~	1
5	1962050	HOSE CLAMP 27-51mm		2
6	~~8011006~~	~~VACUUM HOSE~~	60003100945~60012102405 50010100713~51010101150	1
	8011060	VACUUM HOSE	60012102457~ 50010100713~51010101150~	1
7	~~8132006~~	~~CARBON BRUSH (FRO i18B)~~		2
	8112008	CARBON BRUSH (FRO i18B)		2
	8011022	CARBON BRUSH (FRO i18C)		2
8	1113608	SELFLOCKING NUT M6		3
9	1411612	PLAIN WASHER φ6×φ12×1.6		5
10	8011007	MUFFLER		1
11	~~8132050~~	~~VACUUM MOTOR 24V, KIT (FRO i18B)~~	60003100101~60003100364	1
	8112100	VACUUM MOTOR 24V, KIT (FRO i18B)	60003100365~60012103001~	1
	8011200	VACUUM MOTOR 110V, 500W, KIT (FRO i18C)	50010100124~51010101228~	1
12	8112005	GASKET		1
13	8112006	BOLT		3
14	1111605	HEX NUT M6		3
15	1021616	HEX HEAD BOLT M6×16		10
16	1421618	PLAIN WASHER φ6×φ18×1.6		10
17	8111300	HINGE ASSEMBLY		2
18	8011012	DECAL,RIGHT		1
19	8011009	PLATE		2
20	1421409	PLAIN WASHER 4×9×0.8,SS		5
21	1221410	PH SCREW M4×10,SS		2
22	8111015	FLOAT CAGE		1
23	8111014	FLITER COUPLING		1
24	8111001	GASKET		1
25	1321110	AUTO TAPPING SCREW ST3.5×10		1
26	1421412	PLAIN WASHER φ6×φ12×1.6		1
27	~~8131003~~	~~CAP~~	60003100364~60012102611 50010100713~51010101150	1
	8131004	CAP	60012102612~ 51010101151~	1
28	8011013	CABLE		1

Note:
NO 1,4,7,11：Supplier change, code update.
NO 27：The results are optimized and will also fit older machines.

COVER TANK ASSEMBLY

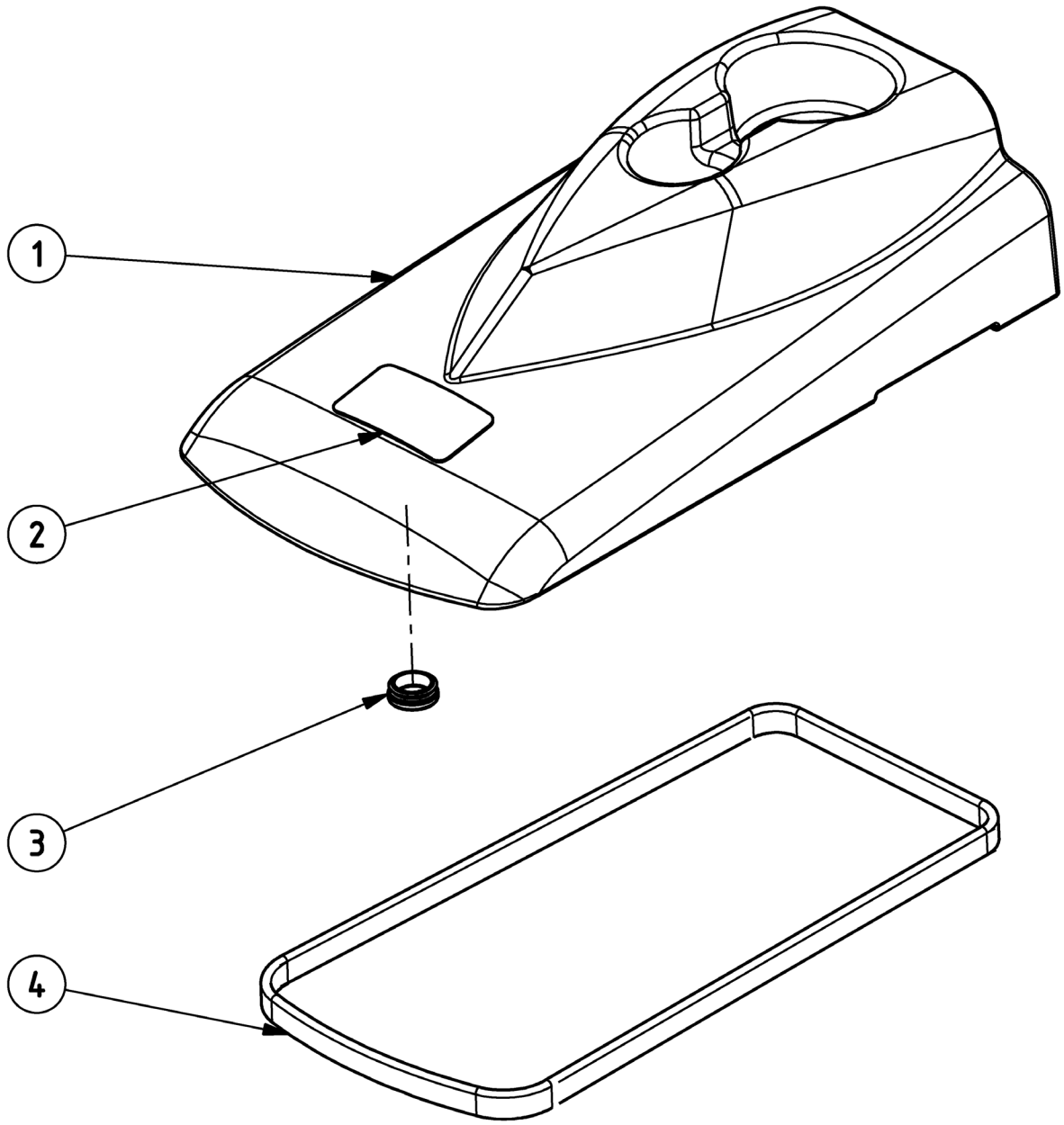

COVER TANK ASSEMBLY

DIA NO.	PART NUMBER	DESCRIPTION	SERIAL NUMBER	NO. REQ'D
1	8012005	COVER TANK		1
2	~~8012001~~	~~WARNING LABLE~~	50010000124~50010100713	1
	8111022	WARNING LABLE (FOR i18B)	60003000364~60012103001~	1
	8012003	WARNING LABLE (FOR i18C)	51010101150~	1
3	8011005	CAP		1
4	~~8012002~~	~~GASKET~~		1
	8012002A	GASKET	60003100471~60012103001~ 50010100557~51010101228~	1

Note:
DIA NO 4:Supplier change, code update.

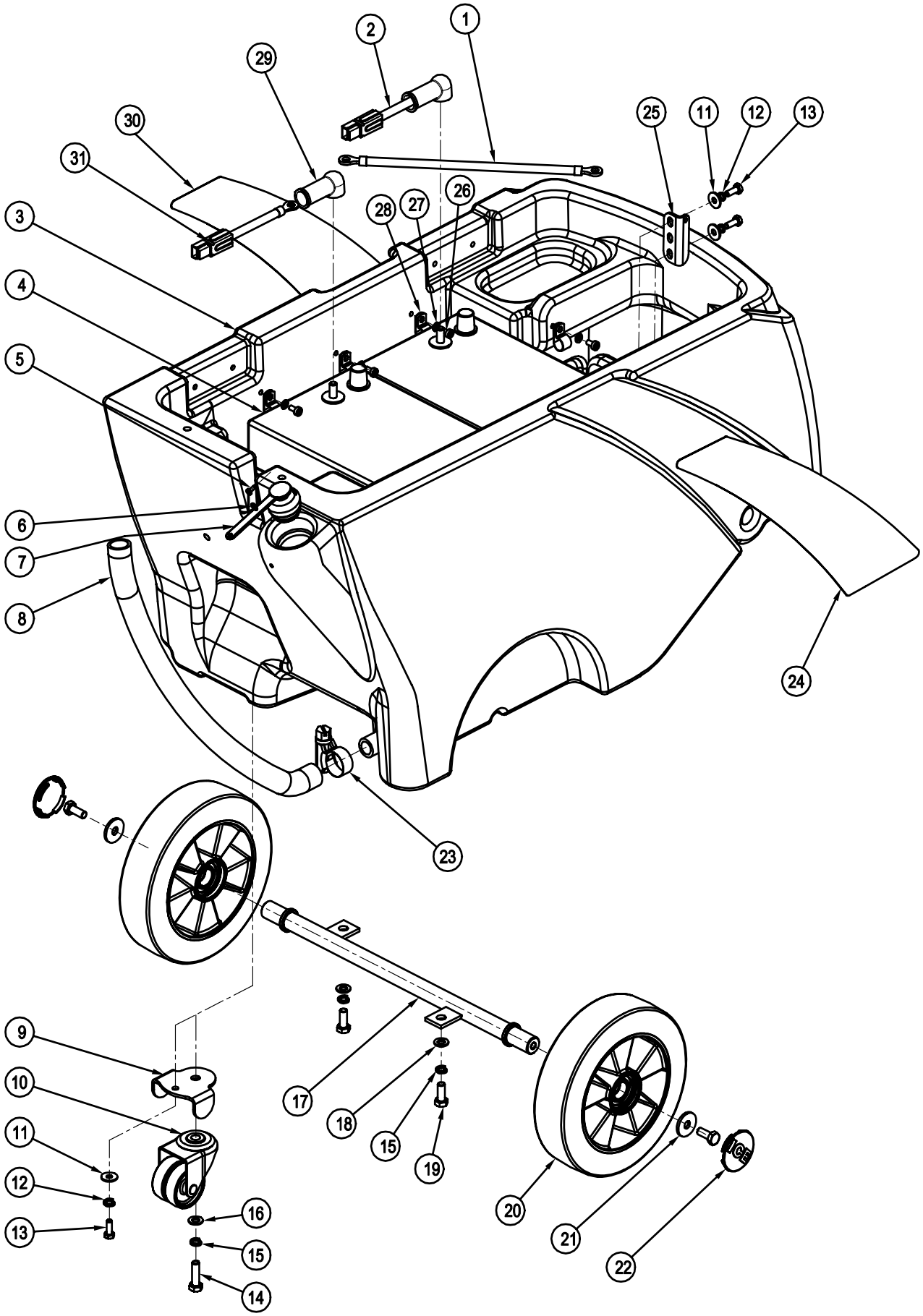
1
2
3
4
5
6
7
8
9
10
11
12
13
14
15
16
17
18
19
20
21
22
23
24
25
26
27
28
29
30
31
ICE

SOLUTION TANK GROUP

DIA NO.	PART NUMBER	DESCRIPTION	SERIAL NUMBER	NO. REQ'D
1	8013008	DECAL,LEFT		1
2	8050475	CABLE ASSEMBLY WITH CONNECTOR(BLACK i18B)		1
	8050475-1	CONNECTOR,BATTERY,BLACK ANDERSON 5916G4(i18B)		1
3	~~8013001~~	~~SOLUTION TANK~~	60003000364~60003000853 50010000124~50010000713	1
	8017001	SOLUTION TANK	60003100945~60012103001~ 50010100713~51010101228~	1
	8133033	SOLUTION TANK(I18B,I18C REPLACE THE OLD WATER TANK 8013001)		1
4	8013010	12V BATTERY (FOR i18B)		2
5	1321110	AUTO TAPPING SCREW ST3.5×10		1
6	1421409	PLAIN WASHER φ4×φ9×0.8		1
7	8133002	PLUG		1
8	8013005	TRANSPARENT HOSE		1
9	8034012	BRACKET, CASTER		1
10	8013016	2" CASTOR		1
11	1421618	PLAIN WASHER φ6×φ18×1.6		3
12	1422616	SPRING WASHER 6 SS		3
13	1021616	HEX HEAD SCREW M6×16,SS		3
14	1021830	HEX HEAD SCREW M8×30,SS		1
15	1422821	SPRING WASHER 8		3
16	1421824	PLAIN WASHER φ8×φ24×2.0		1
17	8016010	WHEEL SHAFT		1
18	1421816	PLAIN WASHER φ8×φ16×1.6		2
19	1021820	HEX HEAD SCREW M8×20,SS		4
20	~~8115200~~	~~8" WHEEL~~	~~~60012103548~~	~~2~~
	8115400	8" WHEEL		2
	1612607	BALL BEARING, 6004LU		4
21	1421828	PLAIN WASHER φ8×φ28×3		2
22	8115203	WHEEL CAP		2
23	1962032	HOSE CLAMP		1
24	8013009	DECAL,RIGHT		1
25	8013002	BACKET		1
26	1221510	PH SCREW M5×10,SS		4
27	1421510	PLAIN WASHER φ5×φ10×1,SS		4
28	8113009	WIRE CLAMP		4
29	8114751	WIRING BOOT (FOR i18B)		4
30	8050476	CABLE ASSEMBLY WITH CONNECTOR(RED i18B)		1
	8050476-1	CONNECTOR,BATTERY,RED ANDERSON 5916G7(i18B)		1
31	8114750	BATTERY CABLE(I18B)		1

Note:
DIA NO 3:The results are optimized and will also fit older machines.

CONTROL BOX ASSEMBLY (FOR i18B)

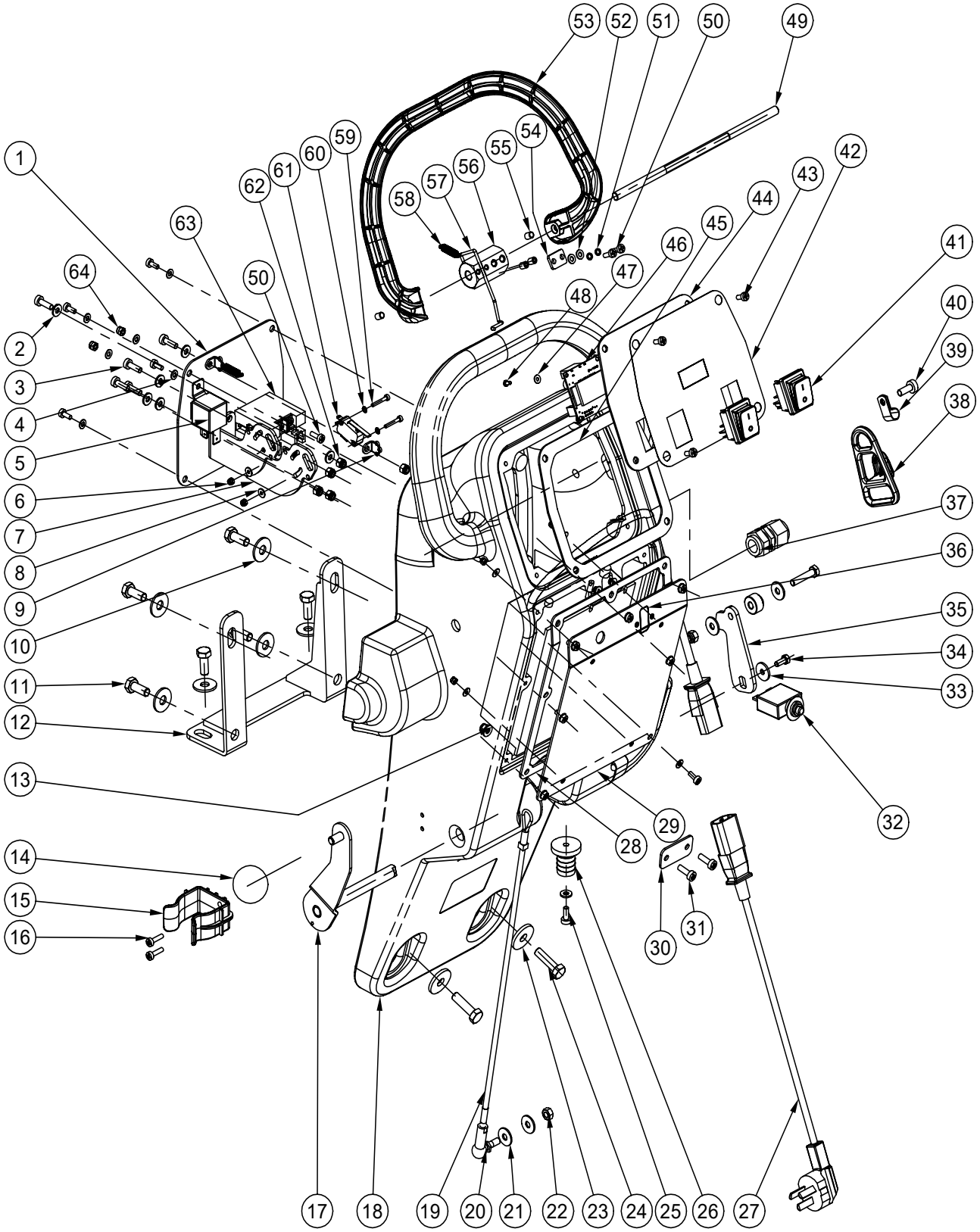

CONTROL CONSOLE GROUP

DIA NO.	PART NUMBER	DESCRIPTION	SERIAL NUMBER	NO. REQ'D
1	8014062	REAR PANEL		1
2	1421512	PLAIN WASHRE φ5×φ12×1.5		9
3	1211516	PH SCREW M5×16		5
4	1421409	PLAIN WASHER φ4×φ9×0.8		13
5	8114707	RELAY		1
6	1113305	SELFLOCKING NUT M3		8
7	8014061	SWITCH BRACKET		1
8	1411309	PLAIN WASHER φ3×φ9×0.8		8
9	8014034	BRCKET		1
10	1411824	PLAIN WASHER φ8×φ24×2		6
11	1021820	HEX HEAD BOLT M8×20		6
12	8114030	FIXING BRACKET,CONTROL BOX		1
13	8014070U	ON BOARD BATTERY CHARGER,KIT WITHOUT POWER CORD,FOR US		1
	8014070G	ON BOARD BATTERY CHARGER, KIT WITHOUT POWER CORD,FOR EU		1
	8014070HK	ON BOARD BATTERY CHARGER, KIT WITHOUT POWER CORD,FOR HK&UK		1
14	8113104	HANDLE		1
15	~~6210111~~	~~HOSE CLAMP~~	60003000364~60003000534 50010000430~50010100924	1
	6210120	HOSE CLAMP	60003101551~60012103001~ 50010100943~51010101228~	1
16	1221416	PH SCREW M4×16 SS		2
17	8014010	SQUEEGEE LIFTING HANDLE		1
18	8014008	CONTROL BOX		1
19	8014013	SQUEEGEE LIFTING ROPE	~60003000515~60012000614	1
	8034010	SQUEEGEE LIFTING ROPE		1
20	8114511	JOINT BEARING SQ6		1
21	1421618	PLAIN WASHER φ6×φ18×1.6,SS		4
22	1121605	HEX NUT M6		2
23	1421828	PLAIN WASHER φ8×φ28×3		2
24	1021830	HEX HEAD BOLT M8×30		2
25	1221512	PH SCREW M5×12,SS		1
26	8114005	PIPE COUPLING		1
27	8112030A	CHARGER CORD (FOR US)		1
	8112040	CHARGER CORD (FOR EU)		1
	8112050	CHARGER CORD (FOR JP)		1
	8112060A	CHARGER CORD (FOR CN)		1
	8112070	CHARGER CORD (FOR UK)		1
28	8014038	GASKET		1
29	8014036	PANEL		1
30	8014044	PLATE		1
31	1221516	PH SCREW M5×16 SS		2
32	8114703	OVERLOAD PROTECTOR 35A		1
33	1421518	PLAIN WASHER 5×18×2		1

CONTROL CONSOLE GROUP

DIA NO.	PART NUMBER	DESCRIPTION	SERIAL NUMBER	NO. REQ'D
34	1021512	HEX HEAD BOLT M5×12,SS		1
35	8034011	BAFFLE		1
36	8014045	TRANSPARENT PLATE		1
37	2320403	STRAIN RELIEF		1
38	8014043	WIRE BUFFER		1
39	8014041	WIRE CLAMP		1
40	1221616	PH SCREW M6×16,SS		1
41	8014006	WATERPROOF SWITCH 250V 16A		2
42	8014067	CONTROL PANEL STICKER	~60012103534	1
	8051421	CONTROL PANEL STICKER	60012103535~	1
43	1221410	PH SCREW M4×10,SS		15
44	8050420	CONTROL PANEL	~60012103534	1
	8051420	CONTROL PANEL	60012103535~	1
45	8014004	GASKET		1
46	8014063	BATTERY CAPACITY INDICATOR	~60012103534	1
	8401160	CONTROL PCBA	60012103535~	1
47	1883102	WASHER M3 PB		4
48	1221306	SCREW M3×6		4
49	8114101	SHAFT		1
50	1221412	PH SCREW M4×12, SS		4
51	1432411	SPRING WASHER 4		2
52	1411409	PLAIN WASHER φ4×φ9×0.8		2
53	8014022	CONTROL TRIGGER		1
54	8014033	PLATE		1
55	1534608	SET SCREW M6×8		4
56	8014031	HEX BUSHING		1
57	8014032	SPRING ROD		1
58	8014035	SPRING		1
59	1211320	PH SCREW M3×20		2
60	1434300	WASHER WITH TOOTH 3		2
61	8114712	MICROSWITCH		1
62	1113507	SELFLOCKING NUT M5		7
63	8210421	RELAY 24VDC 30A	~60012103847	1
	8210427	RELAY 24VDC 30A	60012103848~	1
64	1123406	SELFLOCKING NUT M4, SS		2

Note:
DIA NO 15,19:Supplier change, code update.

CONTROL BOX ASSEMBLY (FOR i18C)

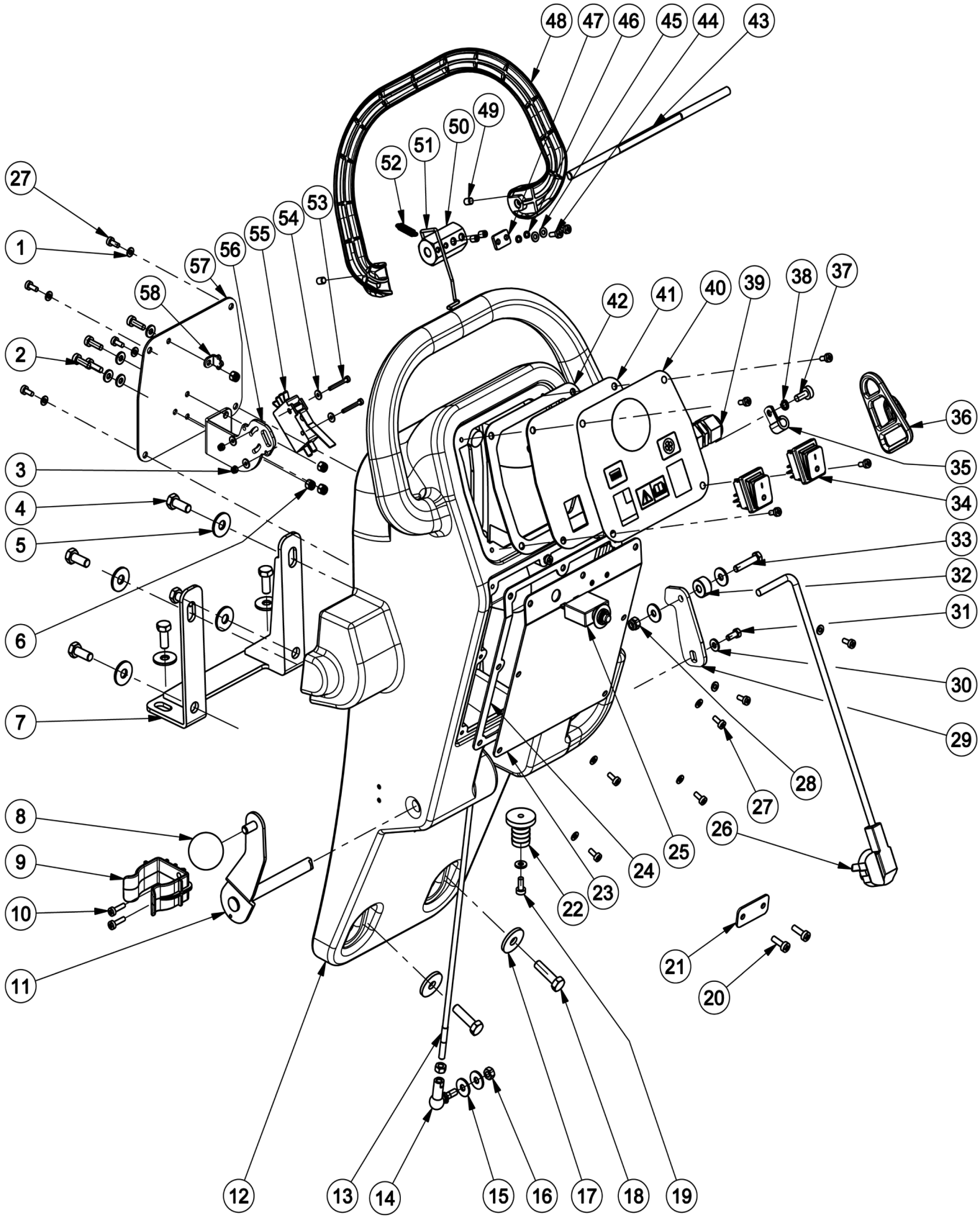

CONTROL CONSOLE GROUP

DIA NO.	PART NUMBER	DESCRIPTION	SERIAL NUMBER	NO. REQ'D
1	1421409	PLAIN WASHER φ4×φ9×0.8		11
2	1211516	PH SCREW M5×16		4
3	1113305	SELFLOCKING NUT M3		2
4	1021820	HEX HEAD BOLT M8×20		6
5	1411824	PLAIN WASHER φ8×φ24×2		6
6	1113507	SELFLOCKING NUT M5		4
7	8114030	FIXING BRACKET,CONTROL BOX		1
8	8113104	HANDLE		1
9	~~6210111~~	~~HOSE CLAMP~~	60003000364~60003000534 50010000430~50010100924	1
	6210120	HOSE CLAMP	60003101551~60012103001~ 50010100943~51010101228~	1
10	1221416	PH SCREW M4×16 SS		2
11	8014010	SQUEEGEE LIFTING HANDLE		1
12	8014008	CONTROL BOX		1
13	~~8014013~~	~~SQUEEGEE LIFTING ROPE~~		1
	8034010	SQUEEGEE LIFTING ROPE		1
14	8114511	JOINT BEARING SQ6		1
15	1421618	PLAIN WASHER φ6×φ18×1.6,SS		4
16	1121605	HEX NUT M6		2
17	1421828	PLAIN WASHER φ8×φ28×3		2
18	1021830	HEX HEAD BOLT M8×30		2
19	1221512	PH SCREW M5×12		1
20	1221516	PH SCREW M5×16 SS		2
21	8014044	PLATE		1
22	8114005	PIPE COUPLING		1
23	8014037	PANEL, BOTTOM		1
24	8014038	GASKET		1
25	8014068	OVERLOAD PROTECTOR 10A		1
26	8014053	POWER CORD		1
27	1221410	PH SCREW M4×10,SS		15
28	1123608	SELFLOCKING NUT M6,SS		1
29	8034011	BAFFLE		1
30	1421512	PLAIN WASHRE φ5×φ12×1.5		8
31	1021512	HEX HEAD BOLT M5×12,SS		1
32	8014101	LIFTING ROPE SPACER		1
33	1021630	HEX HEAD BOLT M6×30,SS		1
34	8014006	WATERPROOF SWITCH 250V 16A		2
35	8014041	WIRE CLAMP		1
36	8014043	WIRE BUFFER		1
37	1221614	PH SCREW M6×14		1
38	1422616	SPRING WASHER 6		1
39	2320403	STRAIN RELIEF		1
40	8014007	PANEL DECAL		1

CONTROL CONSOLE GROUP

DIA NO.	PART NUMBER	DESCRIPTION	SERIAL NUMBER	NO. REQ'D
41	8014005	FRONT PANEL		1
42	8014004	GASKET		1
43	8114101	SHAFT		1
44	1221412	PH SCREW M4×12,SS		2
45	1411409	PLAIN WASHRE φ4×φ9×0.8		2
46	1432411	SPRING WASHER 4		2
47	8014033	PLATE		1
48	8014022	CONTROL TRIGGER		1
49	1534608	SET SCREW M6×8		4
50	8014031	HEX BUSHING		1
51	8014032	SPRING ROD		1
52	8014035	SPRING		1
53	1211325	PH SCREW M3×25		2
54	1411309	PLAIN WASHER φ3×φ9×0.8		4
55	8014071	SWITCH		1
56	8014061	SWITCH BRACKET		1
57	8014002	REAR PANEL		1
58	8014034	BRACKET		1

Note:
DIA NO 9,13:Supplier change, code update.

SCRUB HEAD GROUP

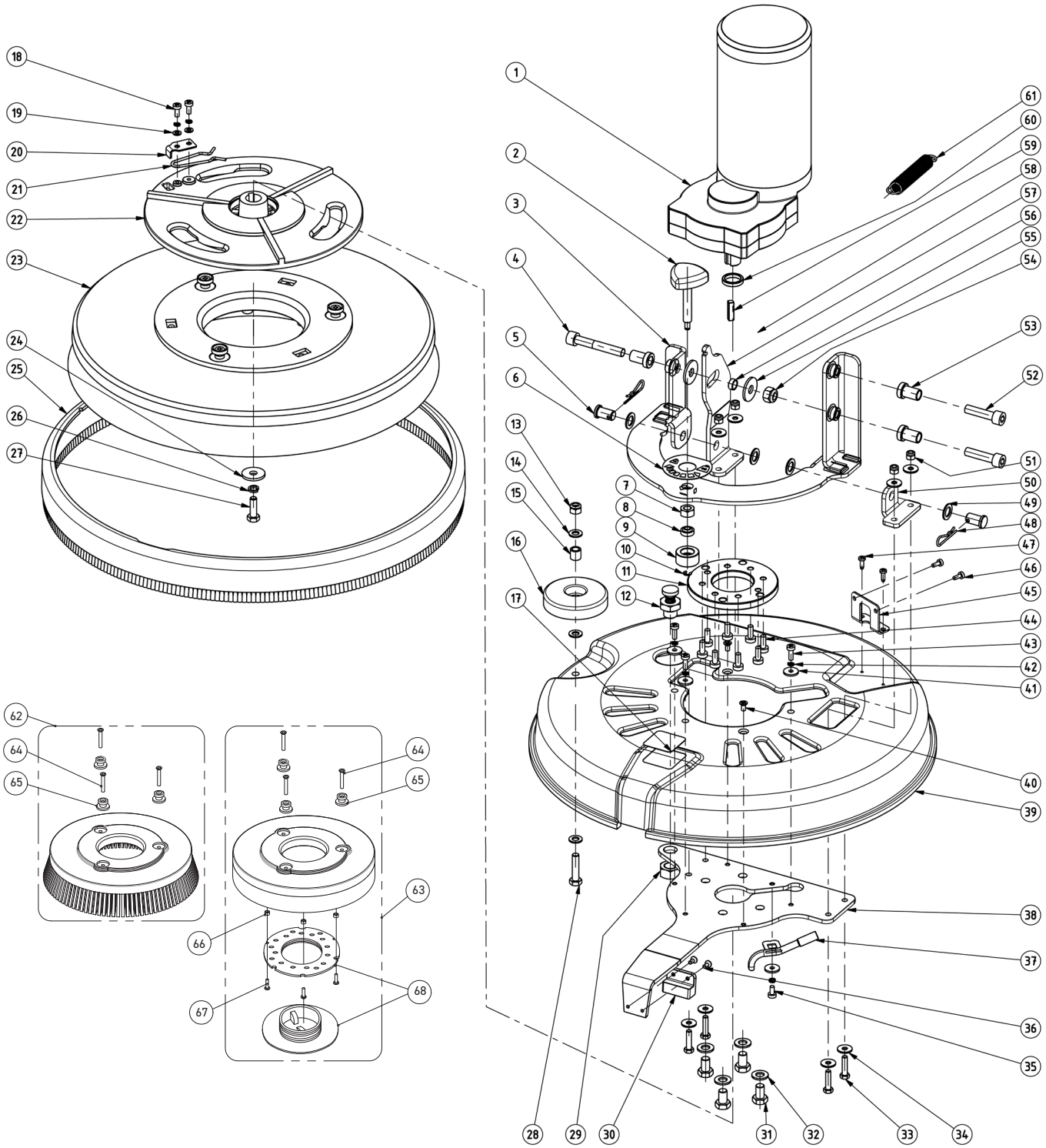

SCRUB HEAD GROUP

DIA NO.	PART NUMBER	DESCRIPTION	SERIAL NUMBER	NO. REQ'D
1	8015200	MOTOR 24V 550W, KIT (FOR i18B)		1
	8015220	MOTOR 120V 550W, KIT (FOR i18C)		1
2	8015020	ADJUSTING HANDLE		1
3	8015010	BRUSH HANGER		1
4	1511065	HEX SOCKET SCREW M10×65		1
5	1644220	PIN 12×20		2
6	8015101	DECAL		1
7	1111008	HEX NUT M10		1
8	8015104	BEARING GEC6C		1
9	8015105	BEARING HOUSING		1
10	1439005	DETENT RING 5		1
11	8015087	ASSAMBLY BOARD		1
12	8015050	BRUSH PLUNGER		1
13	1123810	SELFLOCKING NUT M8,SS		1
14	1421816	PLAIN WASHER φ8×φ16×1.6,SS		3
15	8115404	SPACER		1
16	8116009	BUMPING WHEEL		1
17	8111023	WARNING DECAL		1
18	1221512	PH SCREW M5×12		2
19	1421510	PLAIN WASHER φ5×φ10×1,SS		2
20	8116002	WASHER		1
21	8116003	SPRING CLAMP		1
22	8116008	BRUSH HUB		1
23Δ	9050018	BRUSH 18"		1
24	1421828	PLAIN WASHER φ8×φ28×3		1
25	8015090	SPLASH GUARD		1
26	1422821	SPRING WASHER 8		1
27	1023810	HEX HEAD BOLT 5/16×1",SS		1
28	1021835	HEX HEAD BOLT M8×35,SS		1
29	1111215	HEX NUT M16		1
30	8015108	SUPPORTER		1
31	1011016	HEX BOLT M6×16		1
32	1411020	PLAIN WASHER φ10×φ20×2		4
33	1011625	HEX HEAD BOLT M6×25		4
34	1421618	PLAIN WASHER φ6×φ18×1.6,SS		8
35	1221510	SH SCREW M5×10		1
36	1212410	SH SCREW M4×10		2
37	8015060	WATER INLET		1
38	8015041	MOTOR BRACKET		1
39	8015005	BRUSH COVER		1
40	1222510	SH SCREW M5×10		2
41	1421518	PLAIN WASHER φ5×φ18×2,SS		4
42	1422513	SPRING WASHER 5		5
43	1221515	PH SCREW M5×15		3
44	1221616	PH SCREW M6×16		8
45	8015103	VALVE BRACKET		1
46	1221410	PH SCREW M4×10,SS		2
47	1321213	AUTO TAPPING SCREW ST4.2×13		2

SCRUB HEAD GROUP

DIA NO.	PART NUMBER	DESCRIPTION	SERIAL NUMBER	NO. REQ'D
48	1646240	COTTER PIN 2×40		2
49	8015116	NYLON WASHER φ12.5×φ20×1.5		4
50	8015001	BRACKET		1
51	1123608	SELFLOCKING NUT M6,SS		4
52	1511040	HEX SOCKET SCREW M10×40		2
53	8015007	BUSHING		3
54	1113012	SELFLOCKING NUT M10		1
55	8015115	NYLON WASHER φ10.5×φ30×2.5		2
56	8015121	SPACER 13×10.5×5.5		1
57	8015002	BRACKET		1
58	8116004	DETENT RING		1
59	1656432	KEY 6.35×32		1
60	8015003	SPACER 25.5×19.5×5		1
61	8115004	SPRING		1
62	9050018	BRUSH 18",0.5MM PP,WHITE		1
	9050018W	BRUSH 18",0.35MM PP,WHITE		1
63	9040017	PAD DRIVER 17",CONFIGURE BIG MOUTH		1
	9040017K	PAD DRIVER 17",CONFIGURE CENTER-LOK#3(OPTIONAL)		1
64	1222635	SCREW, M6X35		3
65	8116030	STUD		3
66	8116040	SPACER		3
67	1321325	SELF-TAPPING SCREW, ST4.8X25		3
68	9000001	BIG MOUTH		1
	9000003	CENTER-LOK#3 (OPTIONAL)		1

SQUEEGEE HOLDER ASSEMBLY

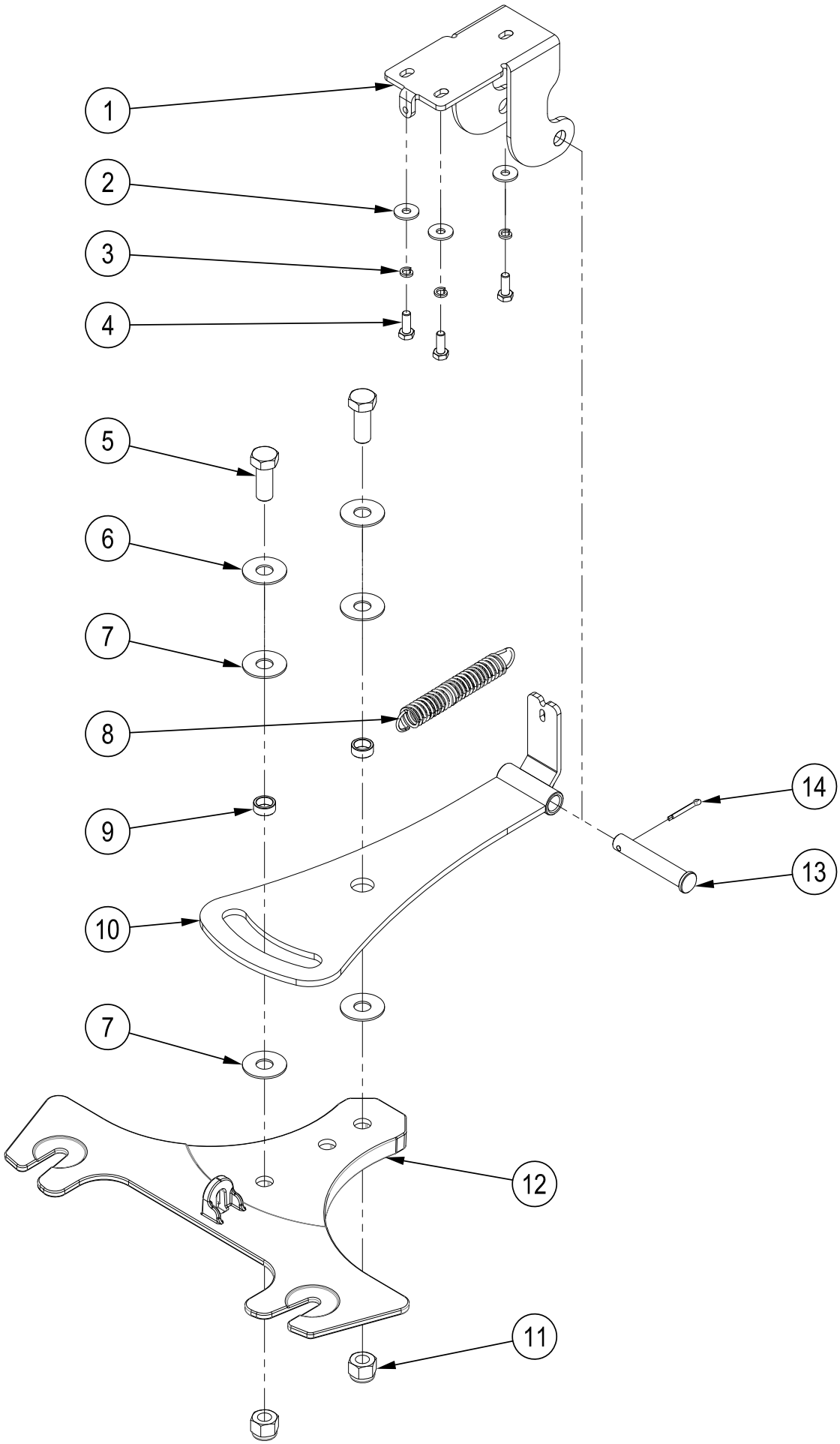

SQUEEGEE HOLDER ASSEMBLY

DIA NO.	PART NUMBER	DESCRIPTION	SERIAL NUMBER	NO. REQ'D
1	8037020	BRACKET, SQUEEGEE MNTG		1
2	1421618	PLAIN WASHER 6×18×1.6		3
3	1422616	SPRING WASHER 6 SS		3
4	1021616	HEX HEAD SCREW M6×16,SS		3
5	1021230	HEX HEAD BOLT M12×30,SS		2
6	1421132	PLAIN WASHER 12×32×2.0		2
7	8035001	PLASTIC WASHER 12×30×1.5		4
8	8115004	SPRING		1
9	~~8115405~~	~~SLEEVEE, P/M~~	60003000364 50010000124~50010000518	2
	8115005	SLEEVEE, P/M	60003000365~60012103001~ 50010000519~51010101228~	2
10	8037010	BRACKET, SQUEEGEE		1
11	1123115	SELFLOCKING NUTS M12		2
12	8115001	SQUEEGEE SUPPORT		1
13	8037015	PIN 12×70		1
14	1645324	COTTER PIN		1

Note:
NO 9：The results are optimized and will also fit older machines.

SOLUTION SYSTEM ASSEMBLY

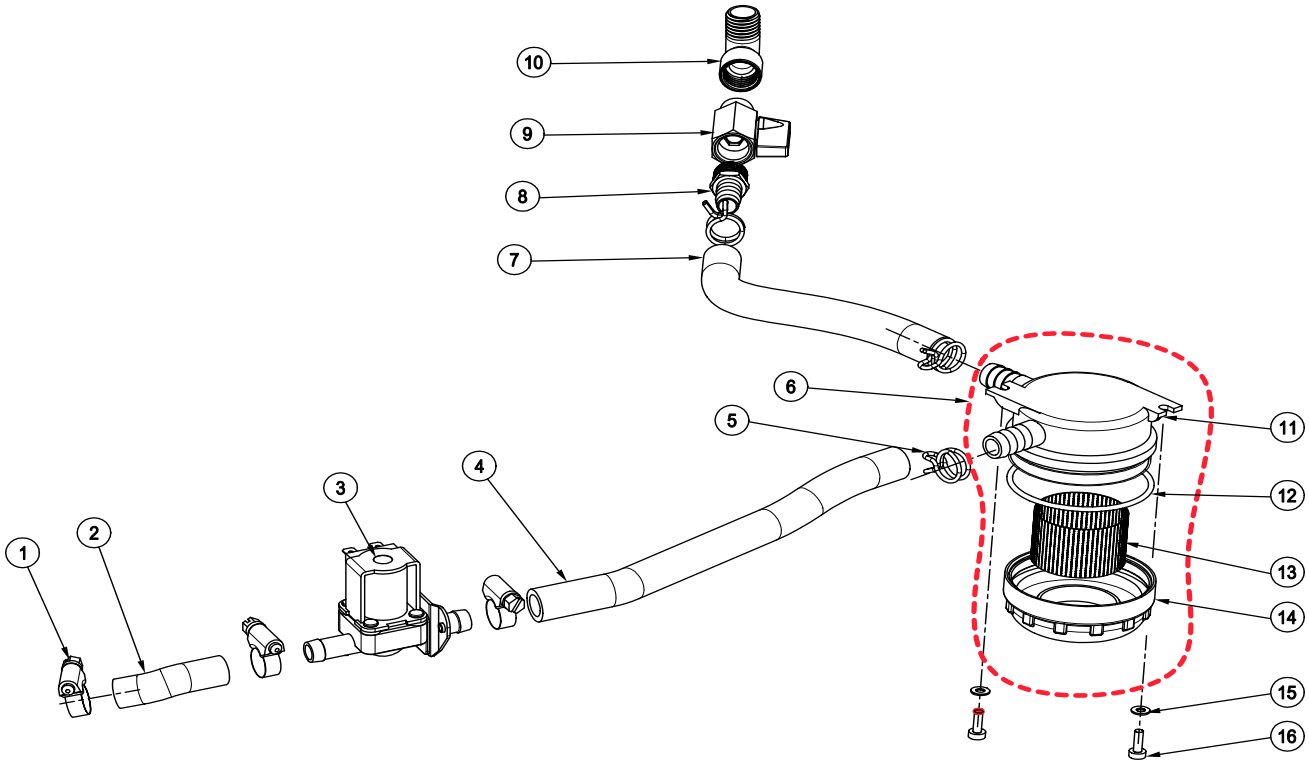

SOLUTION SYSTEM ASSEMBLY

DIA NO.	PART NUMBER	DESCRIPTION	SERIAL NUMBER	NO. REQ'D
1	1962016	HOSE CLAMP		2
2	8018004	HOSE		1
3	8018007	SOLENOID VALVE, 24V (FOR i18B)		1
	8018009	SOLENOID VALVE, 110V (FOR i18C)		1
4	8018003	HOSE		1
5	8119006	HOSE CLAMP		4
6	8119200	WATER FILTER		1
7	8018002	HOSE		1
8	8013007	JOINT		1
9	8018006	BALL VALVE		1
10	8013006	90° JOINT		1
11	8119101	FILTER BODY		1
12	1622765	O RING		1
13	8119104	FILTER SCREEN		1
14	8119102	FILTER COVER		1
15	1421409	PLAIN WASHER 4×9×0.8,SS		2
16	1221412	PH SCREW M4×12, SS		2

SQUEEGEE ASSEMBLY

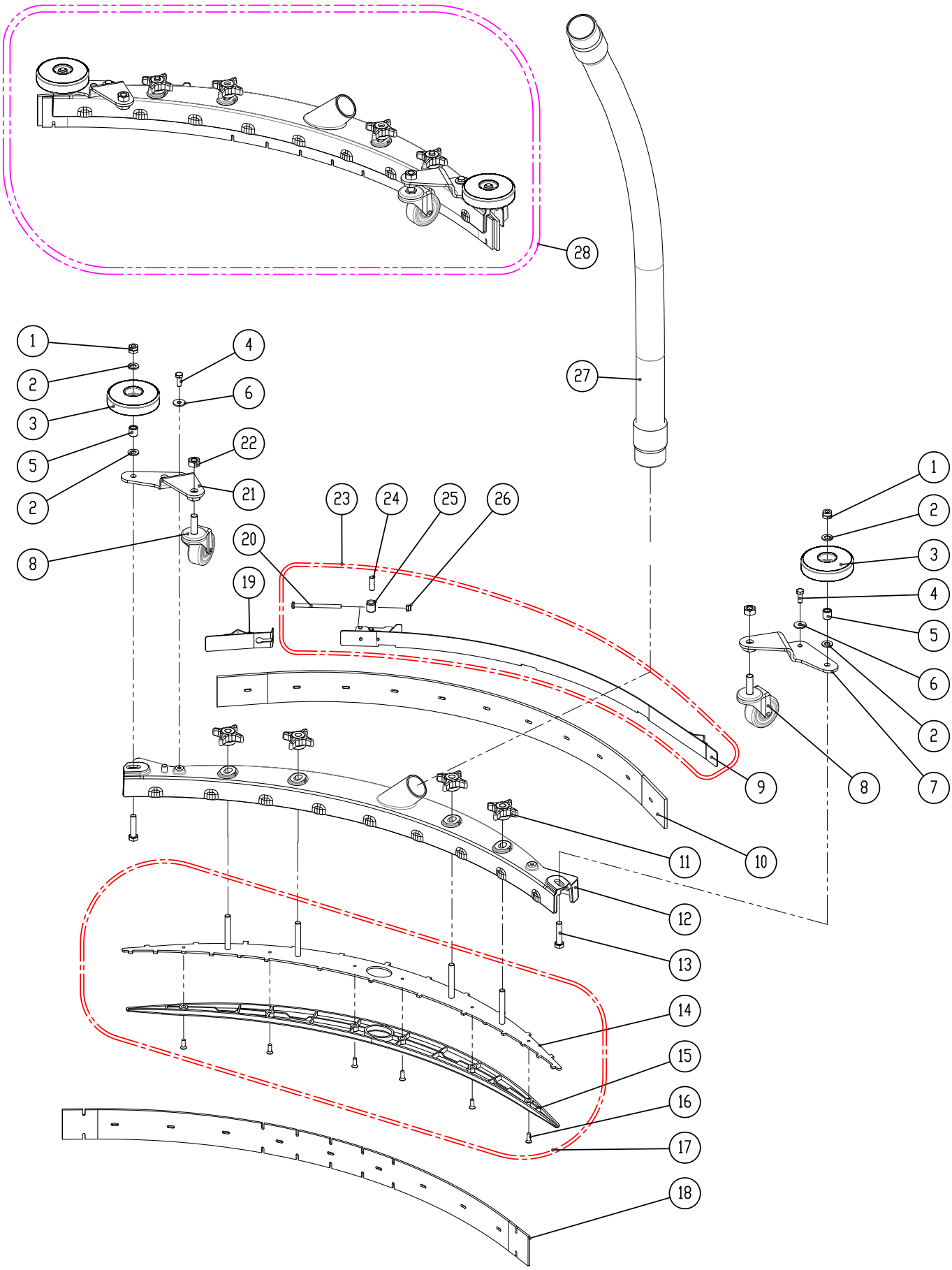

SQUEEGEE ASSEMBLY

DIA NO.	PART NUMBER	DESCRIPTION	SERIAL NUMBER	NO. REQ'D
1	1123810	LOCK NUT M8		2
2	1421824	FLAT WASHER M8× ∮ 24×2.0		4
3	8116009	PROTECTIVE WHEEL		2
4	1021616	HEX BOLT M6×16		2
5	8115404	BEARING, JOURNAL		2
6	1421612	FLAT WASHER M6× ∮ 12×1.6		2
7	8118300	LEFT BRACKET		1
8	8118400	CASTER, 2 INCH		2
9	8118600	CLAMP ASSEMBLY, SQUEEGEE		1
10	8118022	SQUEEGEE BLADE, REAR, LINATEX		1
	8118002	SQUEEGEE BLADE, REAR, PU (OPTION)		1
11	8118003	STAR KNOB M8		4
12	8118004	SQUEEGEE HOUSING		1
13	1021835	HEX BOLT M8×35		2
14	8118009	RETAINER,SQUEEGEE		1
15	8118008	SPACER		1
16	1222515	SCREW M5×15		6
17	8118010	RETAINER ASSEMBLY		1
18	8118021	SQUEEGEE BLADE, FRONT, LINATEX		1
	8118001	SQUEEGEE BLADE, FRONT, PU (OPTION)		1
19	8118610	SHORT CLAMP ASSEBLY		1
20	1221575	SCREW M5×75		1
21	8118200	RIGHT BRACKET		1
22	1121008	HEX NUT M10		2
23	8118600A	CLAMP ASSEMBLY		1
24	8118624	SHAFT		1
25	8118623	SPACER		1
26	1123507	LOCK NUT M5		1
27	~~8011003~~	~~VACUUM HOSE~~		1
	8011060	VACUUM HOSE		1
28	8118000	SQUEEGEE ASSEMBLY, LINATEX		1
	8118000-PU	SQUEEGEE ASSEMBLY, PU		1

Note:
DIA NO 27:Supplier change, code update.

WEAR & TEAR PARTS LIST

DIA NO.	PART NUMBER	DESCRIPTION	SERIAL NUMBER	NO. REQ'D
1	8115200	WHEEL, 8 INCH, WITH BEARINGS		2
2	8116009	BUMPER, ROLLER		3
3	8118022	REAR SQUEEGEE BLADE, LINATEX		1
4	8118021	FRONT SQUEEGEE BLADE, LINATEX		1
5	9040017	PAD HOLDER, 17 INCH		1
6	9050018	BRUSH, 18 INCH		1

WIRING DIAGRAM(i18B)

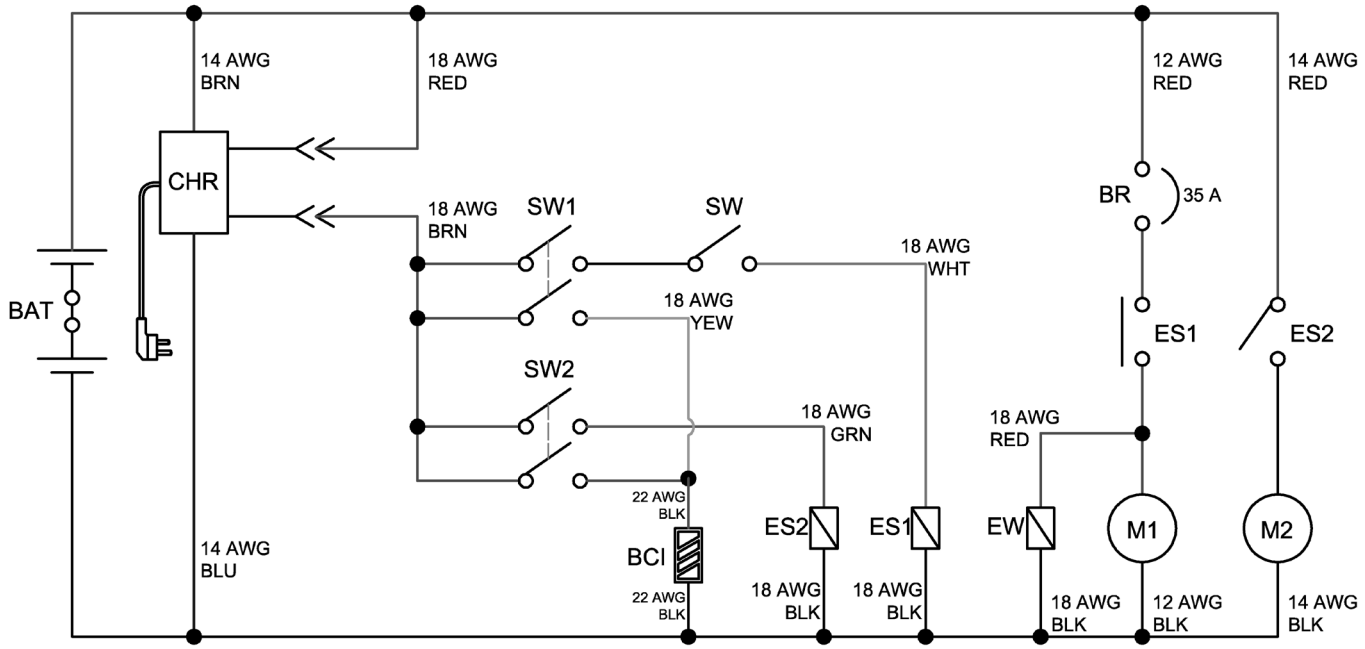

BAT:	2-12V battery
CHR:	On board charger
SW:	Control handle switch
SW1:	Brush motor switch
SW2:	Vacuum motor switch
ES1:	Brush motor solenoid switch
ES2:	Vacuum motor relay
BCI:	Battery capacity indicator
BR:	Circuit breaker
EW:	Solution solenoid valve
M1:	Brush motor
M2:	Vacuum motor

BLK:	Black
BLU:	Blue
BRN:	Brown
GRN:	Green
RED:	Red
WHT:	White
YEW:	Yellow

WIRING DIAGRAM(i18C)

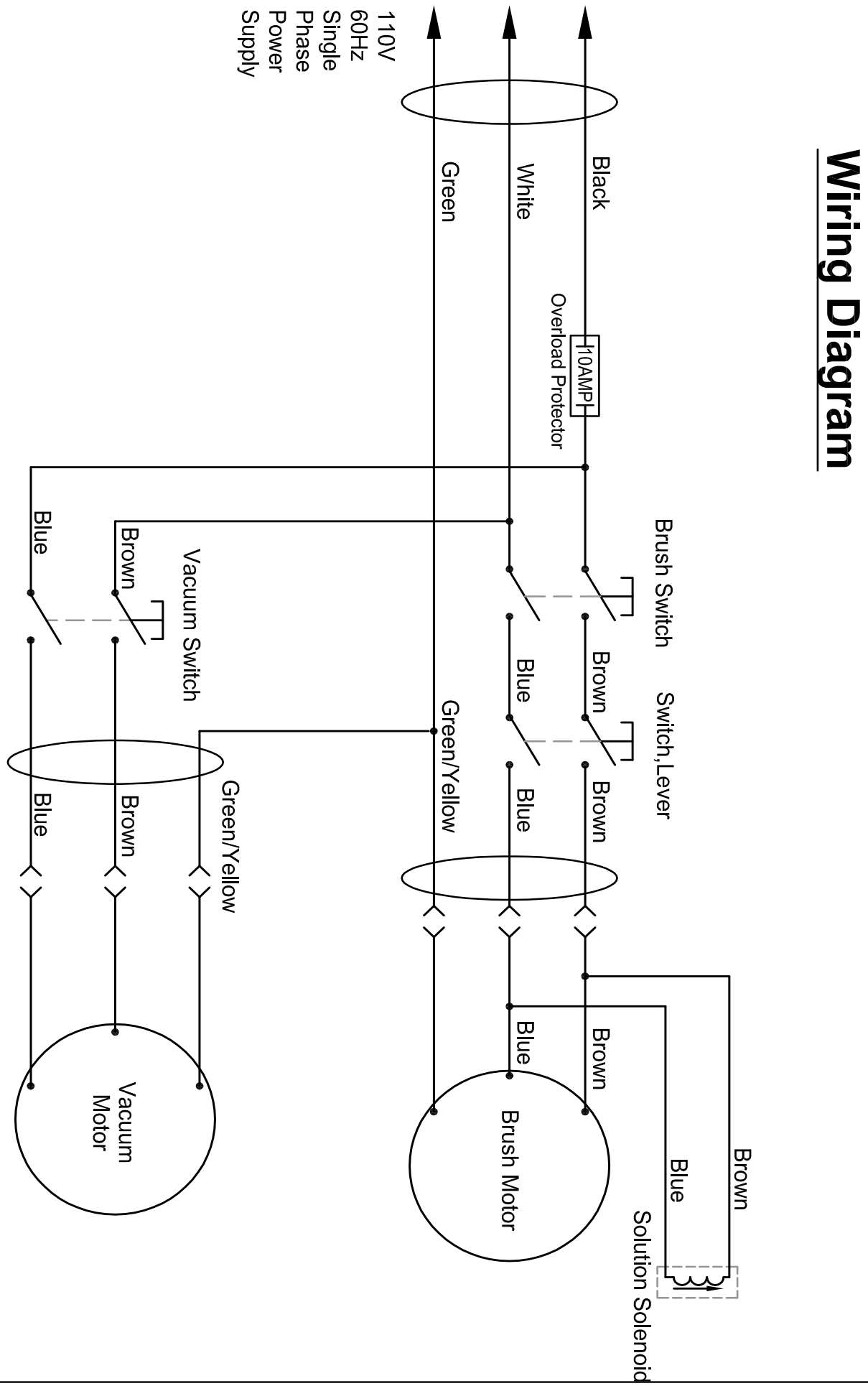

CERTIFICATE OF QUALIFIED

MODEL:_____ SERIAL NO.:_____

INSPECTOR:_____ DATE:_____

ICE Cobotics (GuangDong)Company Limited

TEL:(+86) 769 8186 9000 FAX:(+86) 769 8186 3000