ICE USA

A DIVISION OF ICE COBOTICS

www.ice4usa.com

Operator & Parts Manual

Automatic Scrubber

i20NBL
i20NBTL
i24BTL

i-SYNERGY

Cleaning Management in Motion

8130060
REV.08 (07-2026

READ OPERATOR MANUAL CAREFULLY!

IMPORTANT: To ensure full warranty protection, please fill out & return your warranty card.

Please fill out at time of installation for future reference.

Model No. _____

Serial No. _____

Machine Options _____

Sales Rep. _____

Sales Rep. Phone No. _____

Customer ID Number _____

Installation Date _____

HOW TO ORDER PARTS

Only use ICE Company supplied or equivalent parts. Parts and supplies may be ordered online,by phone, by fax or by mail.

1. Identify the machine model.
2. Identify the machine serial number from the data label.
3. Ensure the proper serial number is used from the parts list.
4. Identify the part number and quantity.
   Do not order by page or reference numbers.
5. Provide your name, company name, customer ID number,billing and shipping address, phone number and purchase order number.

PROTECT THE ENVIRONMENT

Please dispose of packaging materials,old machine components such as batteries, hazardous fluids, including antifreeze and oil, in an environmentally safe way according to local waste disposal regulations.

Always remember to recycle.

ICE Company Limited
XiangShi Road LiaoBu DongGuan GuangDong China
Tel: 0769 - 81869000
Fax:0769 - 81863000

Specifications and parts are subject to change without notice.

TABLE OF CONTENTS

SAFETY PRECAUTIONS....4

MACHINE COMPONENTS....5

PANEL COMPONENTS....6

i-synergy™ INTRODUCTION....7

MACHINE SETUP & INSTALLATION....7

MACHINE OPERATION....8

WHILE OPERATING MACHINE....8

TANK DRAINING....9

BATTERY CHARGING....9

PREVENTATIVE MAINTENANCE....10

FAULT CODE & SOLUTION....11

BASIC TROUBLESHOOTING....12

TECHNICAL SPECIFICATION....13

PARTS LIST....14-49

WEAR AND TEAR PARTS....50

WIRING DIAGRAM....51-52

SAFETY PRECAUTIONS

This machine is intended for commercial use. It is designed exclusively to scrub hard floors in an indoor environment and is not constructed for any other use. Only use recommended accessories.

All operators shall read, understand and exercise the following safety precautions:

1. Do not operate machine:
- Unless trained and authorized.
- Unless you have read and understand the operators manual.
- In flammable or explosive areas.
- If not in proper operating condition.
- In outdoors areas.

2. Before starting machine:
- Make sure all safety devices are in place and operate properly.

3. When using machine:
- Go slow on inclines and slippery surfaces.
- Follow all safety guidelines.
- Be very careful when using the machine in reverse.
- Reduce speed when turning.
- Report and fix any damage to machine prior to operating it.
- Never allow children to play on or around.
- Do not operate on inclines that exceed 5% (3°).

4. Before leaving or servicing machine:
- Stop on level surface.
- Turn off machine.

5. When servicing machine:
- Read operators manual thoroughly prior to operating or servicing this machine.
- Use manufacturer supplied or approved replacement parts.
- Secure machine with wheel blocks prior to jacking the machine up.
- Use approved jack or hoist to safely elevate the machine.
- Disconnect batteries prior to working on machine.
- Avoid moving parts. Do not wear loose fitting clothing while servicing machine.

WARNING: Fire or Explosion Hazard. Keep sparks and open flames away! Keep battery compartment open when charging.

WARNING: Flammable materials can cause an explosion or fire. Do not use flammable materials in tanks.

WARNING: Flammable materials or reactive metals can cause explosion or fire. Do not pick up.

MACHINE COMPONENTS

1. Control Handle
2. Control Handle Start Bail
3. i-synergy™, ID card scanning area
4. Recovery Tank Support Stand
5. Vacuum Motor, 24VDC
6. Lithium-ion Batteries
7. Bucket Fill Port/ Clean-Out Port
8. Solution Tank
9. LED Light
10. Motor Hub Lock Pin (Disk Models)
11. Scrub Head Assembly
12. Scrub Head Skirt
13. Wheels, 8 Inch
14. Caster, 3.15 Inch
15. Caster, 2 Inch, Squeegee Blade Adjustment
16. i-SYNERGY decal
17. ICE Logo
18. Hose Fill-Port
19. Squeegee Storage Bracket
20. Control panel (see Panel components)
21. Emergency Stop Button (Drive Models)
22. Main controller breaker
23. On-board battery charger / Window
24. Solution Tank Level / Drain Hose
25. Heavy Down Pressure Lever
26. Scrub Head Lift Pedal
27. Bumper Rollers
28. Squeegee Assembly
29. Squeegee Vacuum Hose
30. Filter Assembly
31. Ball Valve
32. Cargo Mesh Bag
33. Squeegee Lift Lever
34. Power cord, on-board Battery charger
35. Recovery Tank Drain Hose
36. Recovery Tank
37. Recovery Tank Cover

PANEL COMPONENTS

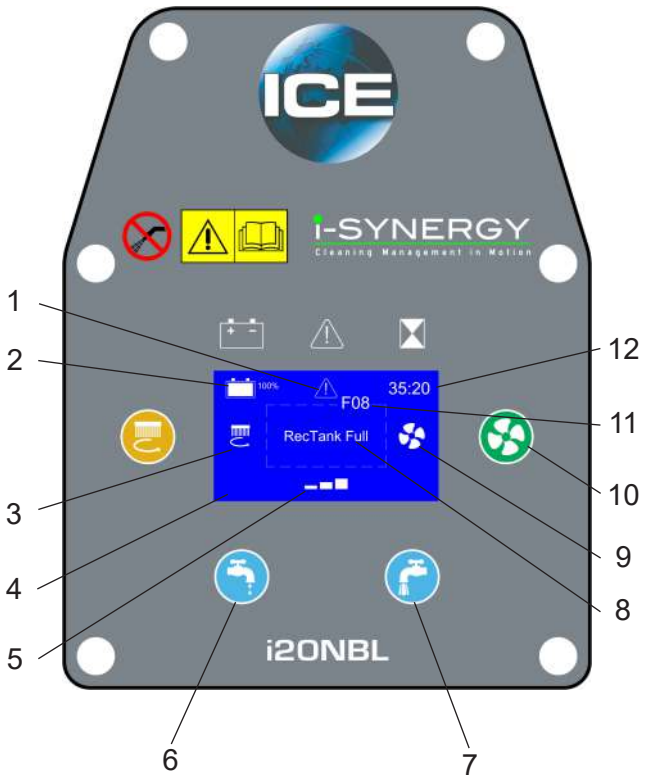

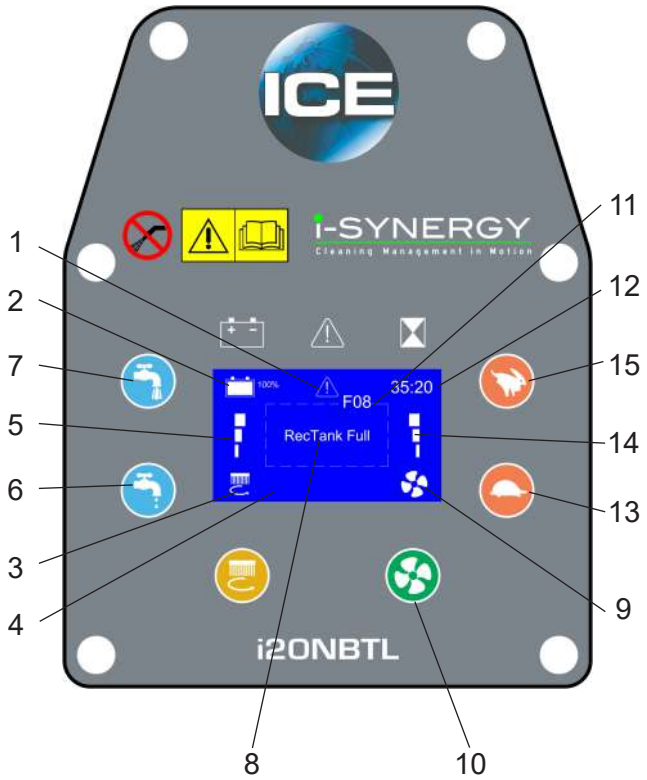

1. Fault indicator
2. Battery meter
3. Brush motor indicator
4. LED display screen
5. Solution flow indicator
6. Solution flow control button (-)
7. Solution flow control button (+)
8. Fault message display area
9. Vacuum motor indicator
10. Vacuum motor switch
11. Fault code
12. Timer
13. Speed control button (-)
14. Speed indicator
15. Speed contorl button (+)

i-synergy™ INTRODUCTION

i-synergy™ collects operational data from cleaning machines and transmit the information to ICE's server. The ICE server generates daily reports and send them to designated end users by email. From these reports, end users will have information about machines' usage and even specific timings.

Besides, i-synergy™ also collects data on lithium-ion battery, vacuum motor, brush deck motor, transaxle, and other electrical components at least once every minute when the machine is in use and even during battery charging.

i-synergy™ will send notifications instantly to the ICE server in case of any malfunction. ICE maintenance personnel will receive a SMS within minutes from the ICE server for immediate servicing.

MACHINE SET UP & INSTALLATION

UNCRATING MACHINE

Be sure and check packing carton for any damage. Immediately report any damage to carrier. Check the contents of package to ensure that the following items are included:

- Machine
- Lithium-ion Batteries
- Squeegee assembly
- Battery Charger
- Pad Driver

INSTALLING BATTERIES

The machine uses the Lithium-ion batteries, the batteries are already in the machine upon delivery; However you will need to connect the Lithium ion batteries to the machine.

WARNING: Fire or Explosion Hazard. Keep sparks and open flames away! Keep battery compartment open when charging.

1. Turn off the machine.
2. Open recovery tank to gain access to battery compartment.
3. Carefully place the Lithium-ion batteries into the compartment. Place the battery brace at the rear of the batteries.
   DO NOT DROP BATTERIES INTO COMPARTMENT!
4. Plug the batteries connector to the machine adaptor, connect machine i-synergy™ COM port with the batteries.

MACHINE SET UP

PRE-OPERATION CHECKS

1. Sweep or dust mop the surface to be cleaned.
2. Check battery meter to make sure batteries are fully charged. (See BATTERY CHARGING)
3. Check that squeegee is properly installed.
4. Check that brush / pad is properly installed.

INSTALLING PAD DRIVER OR BRUSH

1. Ensure that the machine is turned off.
2. Step down on the scrub head lift pedal (see machine components, item #26) to raise the scrub head off the floor.
3. If using a Pad Driver, first attach the appropriate pad to the pad driver surface.
4. Turn the brush motor hub until the slot with the spring clip is visible through the scrub head window.
5. Mount the pad driver or brush to the brush motor hub by lining up the three studs with the three holes in the brush motor hub. Once in the holes, rotate the driver toward the spring clip to lock the pad driver into place.
   If necessary, press down on the motor hub lock pin (see machine componts, item # 10)to lock motor hub in place.
6. For Orbital head Model i20NBTL-OB, you need to attach a rectangular, 20in(508mm)×14in(356mm) Pad to the Orbital Pad driver. align the pad to the Orbital pad driver, press from front-to-back and side to side to alignment.

MOUNTING THE SQUEEGEE ASSEMBLY

1. Lift the squeegee lift lever (see machine components, item #33)to the upward position.
2. Mount the squeegee assembly to the squeegee pivot bracket. make sure the knobs are completely seated into the slots before securing knobs.
3. Connect the vacuum hose to the squeegee assembly. Loop the hose by using the hose clip provided.
4. Check the squeegee blades for proper adjustment.

FILLING THE SOLUTION TANK

The machine is equipped with a hose fill-port (see machine components, item #18) at the rear of the machine, and a bucket fill-port (see machine components, item #7)located under the recovery tank. Before accessing the bucket fill-port make sure that the recovery tank is empty.

Fill the solution tank to the "60L" level on the solution tank sight gauge. When using the bucket fill-port, stop filling when the level reaches the bottom edge of the fill-port.

Convertional scrubbing - Fill solution tank with water (not to exceed 60°C/140°F. Pour a recommended cleaning detergent into the solution tank according to mixing instructions on the container)

NOTE: *When filling the solution tank with a bucket, make sure that the bucket is clean. Do not use the same bucket for filling and draining the machine.*

WARNING: Do not put any flammable materials into solution tank. this can cause an explosion or a fire. Only use recommended cleaning chemicals. Contact your janitorial supply distributor for recommendations on proper chemicals.

MACHINE OPERATION

WARNING: Do not operate machine unless you have read and understand this manual.

1. Lower squeegee assembly to the floor by lowering the squeegee lift lever(see machine components, item #33).
2. Lower the scrub head to the floor by stepping on the scrub head lift pedal(see machine components, item #26).
3. Swiping the ID card (see machine components, item #3) to turn on the machine.
4. Check the battery meter (see Panel components, item #2), if the battery is very low, there will be a Fault code & message on the LED display screen(see Fault code section), and the Fault indicator will blink continuously accompany an audible alarm. please DO NOT continue to operate the machine and recharge the batteries immediately.
5. Check the solution flow indicator (see Panel components, item #5), press the solution flow control button (see Panel components, item #6, 7) to a desired flow rate.
   NOTE: Solution will not begin to flow until the control handle bail is pulled.
6. Turn on the vacuum motor switch(see Panel components, item #10).
7. i20NBL: Pull the control handle bail(see machine components, item #2) backwards to start scrubbing by moving the machine forward.
   The drive model i20NBTL / i24BTL: Pull the control handle bail(see machine components, item #2) backwards to start scrubbing. The machine will automatically propel forward. To reverse the drive model, simply push the control handle bail forward. the speed can be adjusted, Adjust the speed control button (see Panel components, item #13, 15) to a desired scrubbing speed.
   NOTE: *45-60 meters (150-200 ft)per minute is the recommended scrubbing speed.*
8. When more brush pressure is needed for heavily soiled areas simply lift the down pressure lever(see machine components, item #25).
9. To stop scrubbing, release the control handle bail, raise the scrub head and the squeegee assembly.

WHILE OPERATING MACHINE

WARNING: Fire Or Explosion Hazard. Do Not Pick Up Flammable Materials Or Reactive Metals.

1. Go slow on inclines and slippery surfaces. Do not operate the machine on inclines that exceed 5% (3°).
2. Do not keep the machine in the same position with pad / brush spinning, keep the machine moving to prevent damage to floor finish.
3. If the squeegee assembly leaves streaks on the floor, raise the squeegee off the floor and wipe the blades down with a damp cloth. Pre-sweep the area to prevent leaving streaks on the floor.
4. Pour a recommended defoamer into the recovery tank if excessive foam appears.

WARNING: Do not allow foam to enter the float shut-off screen, vacuum motor damage will result. Foam will not activate the float shut-off screen.

5. Occasionally check the battery meter(see Panel components, item #2). when the bettery is very low, stop scrubbing and recharge the batteries.

WARNING: When battery is very low, do not continue to operate the machine. Battery damage may result.

6. When the solution tank runs empty, raise the brush head off the floor. Keep the squeegee down and continue to vacuum until all the dirty water is picked up.

NOTE: *See **TANK DRAINING** section to learn how to drain recovery and solution tanks.*

CIRCUIT BREAKER

The machine is equipped with a resettable circuit breaker(see machine components, item #22) to protect the Main controller. If the circuit breaker should trip, it can't be reset immediately. You must first determine what caused the breaker to trip, and allow the Controller to cool down and then you can manually reset the circuit breakers.

NOTE: *Contact an Authorized Service center for machine repairs.*

HOUR METER

The hour meter (see Panel components, item #12) records the number of total hours the brush motor has been powered on. Use the hour meter to determine when to perform recommended maintenance procedures and to record service history.

TANK DRAINING

1. Turn the machine off.
2. With the squeegee and scrub head in their "up" position, transport machine to approved area for draining tank(s).

DRAINING THE RECOVERY TANK

Any time scrubbing is completed, or when refilling solution tank, the recovery tank should be drained and cleaned.

WARNING: If the recovery tank is not drained when the solution tank has been refilled, foam or water may enter the float shut-off screen and cause damage to the vacuum motor.

1. While holding the drain hose (see machine components, item #35) upward, remove the cap and lower hose to drain.
2. Open the recovery tank cover and rinse out the tank. Use a rag to remove any excess dirt.
3. Clean the float shut-off screen and debris tray located in the recovery tank .

DRAINING THE SOLUTION TANK

Any time scrubbing operation is completed, the solution tank should be drained and cleaned.

1. Pull the solution tank level hose(see machine components, item #24) off the hose fitting, this will allow the solution to flow freely into a bucket or floor drain.
2. Remove the cover of the filter assembly(see machine components, item #30) to drain the solution tank, check the filter screen and clean up it if necessary.
3. Rinse the solution tank with clean water after every use. This will help prevent chemical buildup and clogging of the solution lines.
4. After rinsing out the tank, securely reconnect the tank level hose to the hose fitting, replace the filter assembly cover and be sure the filter screen and the "O" ring is in the correct position.

BATTERY CHARGING

WARNING: Fire Or Explosion Hazard. Keep Sparks and Open Flame Away. Keep Battery Compartment Propped Open When Charging.
Only use ICE supplied or approved batteries charger, use unapproved charger may cause damage to the batteries and machine.
Batteries charger specifications:

- **Applicable to charging Lithium-ion batteries**
- **Automatic shut off circuit**
- **Output current of 15 Amps**
- **Output voltage of 24 volts**

1. Place machine in a well ventilated area.
2. Turn the machine off.
3. Connect the charger's AC power supply cord (see machine components, item #34)to a properly grounded receptable.
4. Prop up the recovery tank by the support stand (see machine components, item #4) for ventilation when charging.
5. The charger will automatically begin to charge and will automatically shut off once the batteries are fully charged.
6. Upon completion of charging, disconnect the AC power supply cord.

PREVENTATIVE MAINTENANCE

WARNING: Before performing any maintenance on the machine, be sure that the power is turned off, or the batteries are disconnected!

WARING: Repairs are to be completed by Authorized service centers only. Any repairs completed by unauthorized persons will avoid the warrenty.

DAILY MAINTENANCE

1. Remove pad driver/ brush and clean with approved cleaner.
2. Drain recovery and solution tanks completely and rinse out with clean water. Visually check the recovery tank for debris and clean out as necessary.
3. Raise the squeegee assembly off floor and wipe it down with a damp towel. Be sure to store the squeegee in the up position.
4. Remove the float shut-off assembly and rinse it out with clean water.
5. Clean machine with an approved cleaner and a damp towel.
6. Recharge the batteries.
7. Check the condition of the squeegee blade wiping edge, rotate blade if worn.

MONTHLY MAINTENANCE

1. Clean the battery tops to prevent corrosion.
2. Check for loose battery cable connections.
3. Inspect and clean the recovery tank cover seal. Replce it if damaged.
4. Lubricate all grease points and pivot points with silicon spray and approved grease.
5. Check the machine for loose nuts and bolts.
6. Check the machine for leaks.

MACHINE STORAGE

1. Always store the machine indoors.
2. Always store the machine in a dry area.
3. Always store the machine in its upright position.
4. Always store the machine with the pad driver/ brush raised off the floor.
5. Always store the machine with the squeegee assembly raised off the floor.
6. If storing in an area which may reach freezing temperatures, be sure to drain all fluids from the machine prior to storage. Any damage caused by freezing temperatures will not be covered by the warranty.
7. Drain the recovery tank.
8. Drain the solution tank of all fluid.

FAULT CODE & SOLUTION

The machine is equipped with a LED display screen (see Panel components, item # 4), the LED screen will display the operating hours (see Panel components, item # 12) and the battery level status (see Panel components, item # 2).
When the machine detects a fault, there will be a Fault code (see Panel components, item #11) & Fault message (see Panel components, item #8) display on the LED screen, and the Fault indicator (see Panel components, item #1) will flash continuously, accompany an audible alarm Occasionally.

Once fault occuring, please DO NOT continue operate the machine unless the fault are eliminated. Turn off the machine, then to solve the fault, the fault code & message will be eliminated when machine restart.

If the fault is occurred frequently, or the fault can't be eliminated, please contact ICE service center.

Please refer to the below table to determine the fault cause and the solution.

FAULT CODE	FAULT MESSAGE	MODEL		FAULT CAUSE	SOLUTION
		i20NBL	i20NBTL i24BTL		
F01	Lower Brush Deck	●		Brush deck is off the floor	Release the control handle bail Or Lower the Brush deck
F04	Vac Mtr O.L. RE-START!	●	●	Vacuum motor overload	Turn off the machine,after a moment, RE-START machine
F06	Bru Mtr O.L. RE-START!	●	●	Brush motor overload	
F07	Propel Mtr O.L. RE-START!		●	Propel motor overload	
F10	Batt Low Charge Batt	●	●	Battery is low	Charge the battery
F11	Batt Empty Charge Batt NOW	●	●	Battery is empty	Charge the battery NOW
F12	Brake Wiring Error		●	Bad Brake wiring Bad Brake	Check the brake wiring Replace the Brake assembly
F14	Replace Brake Assy		●	Bad Brake assembly	Replace the brake assembly
F16	Control Unit Overheat! Wait	●	●	Control Unit Overheat	Turn off the machine,after a moment, RE-START machine
F17	Replace Control Unit	●	●	Control Unit Fault	Replace the control unit
F20	Check Brush Motor		●	Bad brush motor	Check the brush motor / Wiring
F21	Check Vac Mtr	●	●	Bad Vacuum motor or wiring	Check the vacuum motor / Wiring
F22	Check Soln Solenoid	●	●	Solution solenoid wiring fault	Check the wiring & Contactors
F23	Replace Soln solenoid	●	●	Bad Solution solenoid	Replace the solution solenoid
F24	Check Propel Motor		●	Bad propel motor	Check the propel motor / Wiring
F25	Check Brush Motor	●		Bad brush motor	Check the brush motor / Wiring
F40	Check Proximity Sw	●	●	Proximity switch fault	Check the Proximity switch
F41	Release Handle	●	●	Operation mistake	Release the control handle bail
F42	Replace Control Unit	●	●	Bad Control Unit	Replace the control unit
F43	Turn Dead Sw Off RE-START!		●	Emergency stop button activated.	Release emergency stop button and restart machine.
F44	Replace Control Unit	●	●	Bad Control Unit	Contact service center, Replace the Control Unit
F45	Return Control Unit	●	●		
F46	Return Control Unit	●	●		
F47	Return Control Unit	●	●		
F48	Return Control Unit	●	●		

BASIC TROUBLESHOOTING

PROBLEM	CAUSE	SOLUTION
Machine will not operate	Control handle bail not pulled	Pull control handle bail
	Lithium-ion batteries need to be charged	Charge batteries
	Bad lithium-ion batteries	Replace batteries
	Loose batteries connection	Tighten the connector
	Main control unit circuit breaker tripped	Reset main control unit breaker
	Faulty i-synergy™ module	Contact ICE service center
Brush motor will not operate	Scrub head is raised off floor	Lower scrub head
	Faulty scrub head (up/down)switch	Contact ICE service center
	Faulty control handle bail switch	Contact ICE service center
	Faulty brush motor or wiring	Contact ICE service center
	Worn Motor carbon brushes	Contact ICE service center
Machine does not propel (Drive model)	Faulty transaxle motor or wiring	Contact ICE service center
	Worn Motor carbon brushes	Contact ICE service center
Vacuum motor will not operate	Faulty vacuum motor or wiring	Contact ICE service center
	Worn Motor carbon brushes	Contact ICE service center
Little or no solution flow	Ball valve set too low or shut off	Turn on the ball valve
	Solution flow control knob set too low or shut off	Adjust solution control flow knob
	Clogged solution tank filter or solution hose	Clean solution tank filter or flush out solution hose
	Clogged solution Solenoid valve	Remove valve and clean
Poor water pick up	Recovery tank is full	Drain recovery tank
	Loose drain hose cap	Tighten cap
	Clogged float shut-off screen located in recovery tank	clean screen
	Clogged squeegee assembly	Clean squeegee assembly
	Worn squeegee blades	Replace or rotate squeegee blades
	Incorrect squeegee blade deflection	Adjust squeegee blade height
	Loose vacuum hose connections	Secure hose connections
	Clogged vacuum hose	Remove clogged debris
	Damaged vacuum hose	Replace vacuum hose
	Recovery tank cover not in place	Properly position cover
	Damaged recovery tank cover seal	Replace seal
	Faulty vacuum motor	Contact ICE service center
	Low battery charge	Recharge batteries
Short run time	Low battery charge	Fully recharge batteries
	Defective batteries	Replace batteries
	Faulty battery charger	Repair or replace battery charger
	Down pressure lever is set for extra scrub head pressure	Lower down pressure lever

TECHNICAL SPECIFICATIONS

MODEL	i20NBL Brush Assist	i20NBTL W/ Drive	-	i24BTL Dual disk
DIMENSIONS L	55.7 in / 1,415 mm		-	52.2 in / 1,325 mm
DIMENSIONS W	22 in / 560 mm		-	25.6 in / 650 mm
DIMENSIONS H	44.9 in / 1,140 mm		-	44.9 in / 1,140 mm
WEIGHT	210 lbs / 95 Kg	230 lbs / 105 Kg		
WEIGHT with BATTERIES	310 lbs /140 Kg	330 lbs / 150 Kg		
RECOVERY TANK CAPACITY	17.2 Gal / 65 L			
SOLUTION TANK CAPACITY	15.9 Gal / 60 L			
SQUEEGEE WIDTH	30 in / 762 mm			
CLEANING PATH WIDTH	20 in / 500 mm (Disk)		-	24 in / 600mm
PRODUCTIVITY RATE	19,375 ft^2 / 1,800 m^2 h	23,680 ft^2 / 2,200 m^2 h		28,000 ft^2 / 2,600m^2 h
DRIVE SYSTEM	Brush Assisted	Transaxle, 0.27 hp / 0.2KW		
TRAVEL SPEED, MAXIMUM	N/A	246 ft / Min 75 m / Min		
MINIMUM AISLE TURN	63 in / 1,600 mm			
PAD/BRUSH PRESSURE	65 lbs / 30 Kg Min 100 lbs / 45 Kg Max			
SOLUTION FLOW RATE	0 ~ 0.37 Gal / Min 0 ~ 1,400 ml / Min			
BRUSH MOTOR	0.75hp / 0.55KW 220 RPM		-	0.9hp / 0.68KW 2,000RPM
VIBRATIONS @ CONTROLS	N/A		-	N/A
VACUUM MOTOR	0.7hp / 0.5KW			
WATER LIFT - AIR FLOW	45 in / 1,143 mm			
BATTERIES	Lithium-ion batteries, 120AH			
RUN TIME PER CHARGE	3.5 Hours	3 Hours		
VOLTAGE DC	24V			
DECIBEL RATE AT OPERATOR'S EAR, INDOORS	68dB(A)		-	68dB(A)
GRADE LEVEL, MAX	5% (3°)			

RECOVERY TANK GROUP

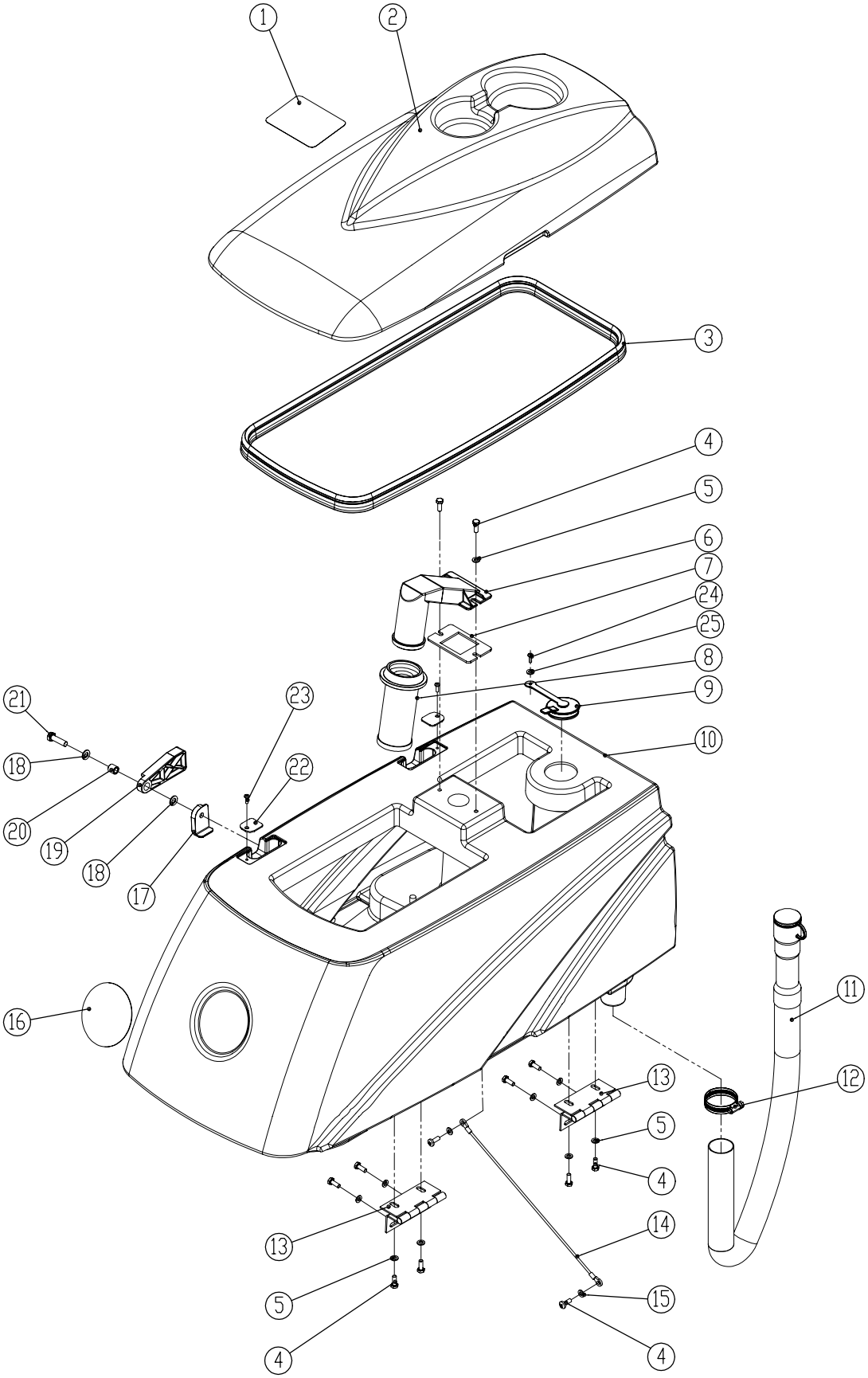

RECOVERY TANK GROUP

DIA NO.	PART NUMBER	DESCRIPTION	SERIAL NUMBER	NO REQ'D
1	8111022	WARNING LABEL		1
2	8131002	RECOVERY TANK COVER		1
3	8131005A	RECOVERY TANK COVER SEAL		1
4	1021616	HEX BOLT M6 X 16		12
5	1421618	FLAT WASHER M6×ϕ18×1.6		10
6	8111014	FLOAT ADAPTER		1
7	8111001	GASKET		1
8	8111015	FLOAT, SHUT-OFF		1
9	8131004	CAP		1
10	8131001	RECOVERY TANK		1
11	8131030	DRAIN HOSE		1
12	1962050	CLAMP		1
13	8111300	HINGE ASSEMBLY		2
14	8131020	CABLE		1
15	1421612	FLAT WASHER M6×ϕ12×1.6		2
16	4010316	ICE LOGO		1
17	8111008	BRACKET		1
18	1421816	FLAT WASHER M8×ϕ16×1.6		2
19	8111007	RECOVERY TANK SUPPORT		1
20	8115404	SLEEVE, P/M		1
21	1021830	HEX BOLT M8×30		1
22	8111016	PLATE		2
23	1221412	SCREW M4×12		2
24	1321110	SELF-TAPPING SCREW ST3.5 ×10		1
25	1421409	FLAT WASHER M4× ϕ9×0.8		1

NOTES:
DIA NO.9 :Two pieces change to one pieces,material is changed to rubber.

VACUUM FAN GROUP

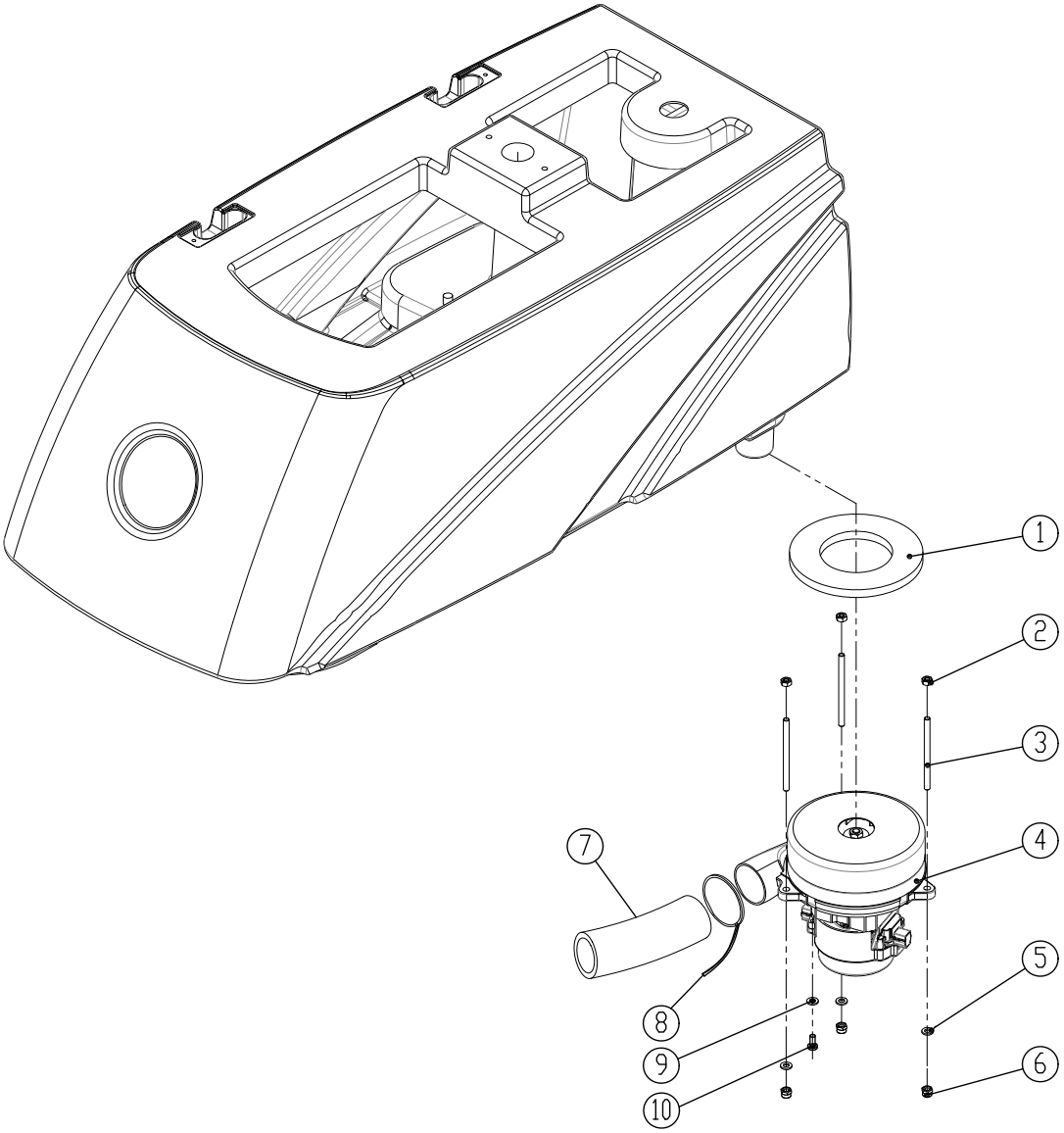

VACUUM FAN GROUP

DIA NO.	PART NUMBER	DESCRIPTION	SERIAL NUMBER	NO REQ'D
1	8112005	GASKET, VACUUM MOTOR		1
2	1121605	HEX NUT M6		3
3	8112006	STUD M6×92		3
4	8116500	VACUUM MOTOR , KIT, 24VDC		1
	8112008	CARBON BRUSH, 24VDC VACUUM MOTOR		2
5	1421612	FLAT WASHER M6× ∮12×1.6		7
6	1123608	LOCK NUT M6		3
7	8132007	MUFFLER, VACUUM MOTOR		1
8	1914300	TIE, NYLON, 5X300		2
9	1422513	LOCK WASHER M5		1
10	1321310	TAPPING SCREW ST5X10		1

NOTES:
DIA NO.4:Supplier change code update.
DIA NO.9 10:Design optimization of new parts.

SOLUTION TANK GROUP

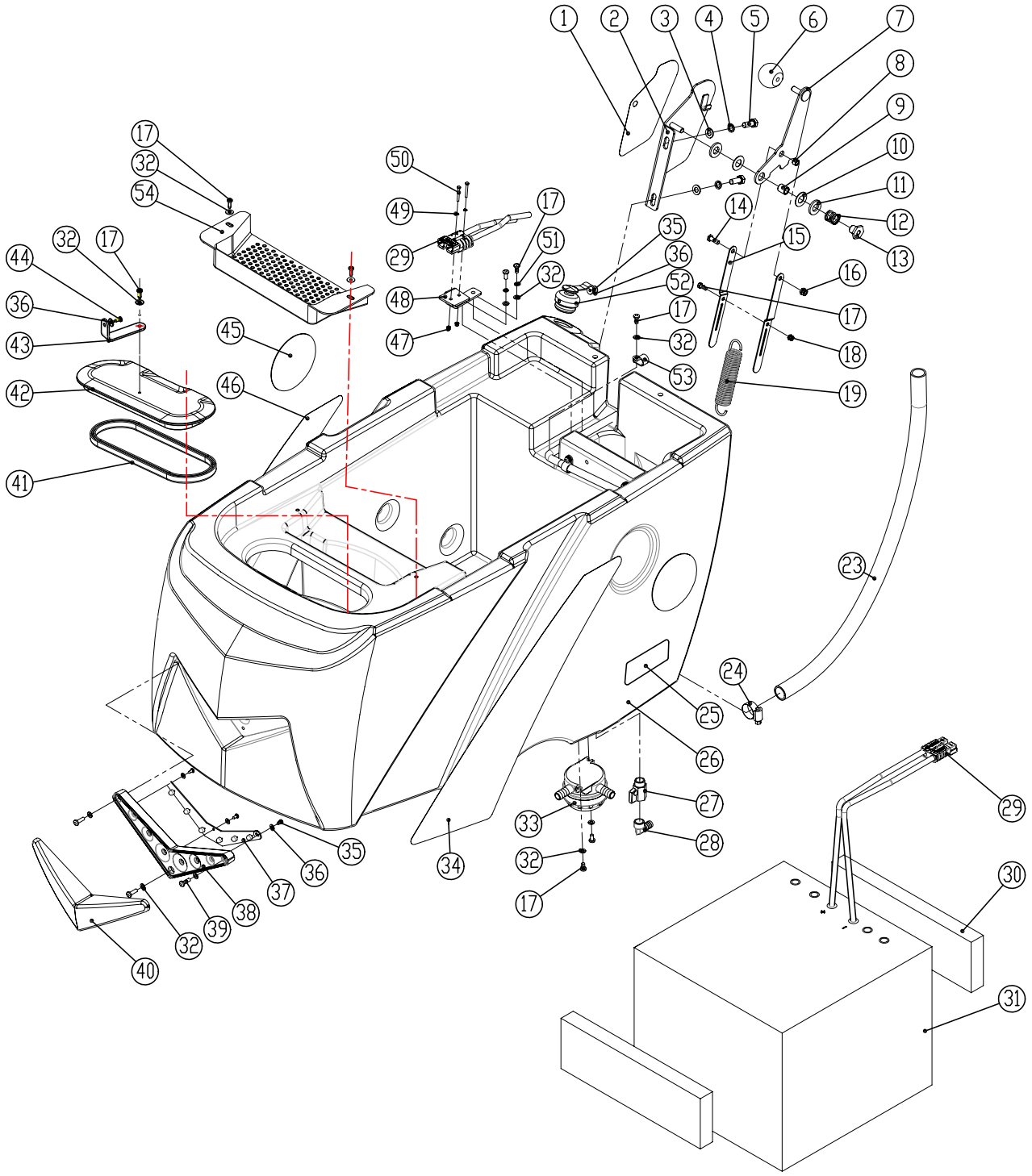

SOLUTION TANK GROUP

DIA NO.	PART NUMBER	DESCRIPTION	SERIAL NUMBER	NO REQ'D
1	8113115	DOWN PRESSURE LABEL		1
2	8113101	DOWN PRESSURE LEVER BRACKET		1
3	1421816	FLAT WASHER M8×∮16×1.6		2
4	1422821	LOCK WASHER M8		2
5	1021820	HEX BOLT M8×20		2
6	8113104	BALL KNOB		1
7	8113106	DOWN PRESSURE LEVER		1
8	8113112	BUSHING		1
9	8113110	SLEEVE, P/M		1
10	8113111	NYLON FLAT WASHER∮12.9×∮25.4×0.8		2
11	8113109	THRUST BEARING		2
12	8113114	SPRING		1
13	8113107	RETAINER, SPRING		1
14	8113103	BOLT M6×18		1
15	8113108	LINK, SPRING		2
16	1123608	LOCK NUT M6		1
17	1221512	SCREW M5×12		17
18	1123507	LOCK NUT M5		1
19	8133113	SPRING		1
20	~~8133501~~	~~CARGO NET~~		1
21	~~8133502~~	~~CLAMP~~		4
22	~~1221412~~	~~SCREW M4X12~~		4
23	8133008	CLEAN TUBING		1
24	1962025	CLAMP 16-25mm		1
25	8130099	i-SYNERGY DECAL		2
26	8133001	SOLUTION TANK		1
27	8119005	BALL VALVE, G1/2		1
28	8119007	ELBOW G1/2		1
29	8134750	CONNECTOR, GRID, BLUE		2
30	8113013	SPACER, BATTERY		2
31	——	——	——	——
	Contact ICE	LITHIUM BAT,24V 120Ah 4G		-
32	1421510	FLAT WASHER M5×∮10×1		19

SOLUTION TANK GROUP

DIA NO.	PART NUMBER	DESCRIPTION	SERIAL NUMBER	NO REQ'D
33	8119200	FILTER ASSEMBLY		1
34	8133025	LABEL, LEFT SIDE		1
35	1321110	SELF-TAPPING SCREW ST3.5 ×10		4
36	1421409	FLAT WASHER M4×∮9×0.8		5
37	8133610	LED LIGHT, KIT		1
38	8133601	LED LIGHT MNTG BASE		1
39	1221520	SCREW M5X20		3
40	8133602	LED LIGHT COVER		1
41	8113030	SEAL		1
42	8113002	COVER		1
43	8113007	STRAP		1
44	1321213	SELF-TAPPING SCREW ST4.2X13		1
45	4010316	ICE Logo		2
46	8133026	LABEL, RIGHT SIDE		1
47	1123305	LOCK NUT M3		2
48	8113010	BRACKET, CONNECTOR MTG		1
49	1434300	LOCK WASHER, TOOTH, M3		2
50	1211325	SCREW M3×25		2
51	1422513	LOCK WASHER M5		2
52	8133002	CAP, SOLUTION FILL		1
53	8113009	NYLON, CLAMP		9
54	8134067	BAFFLE		1

NOTES:
DIA NO.20 21 22 :Structure optimization deletion.
DIA NO 54：Structural optimization increase.

CONTROL CONSOLE GROUP (i20NBL)

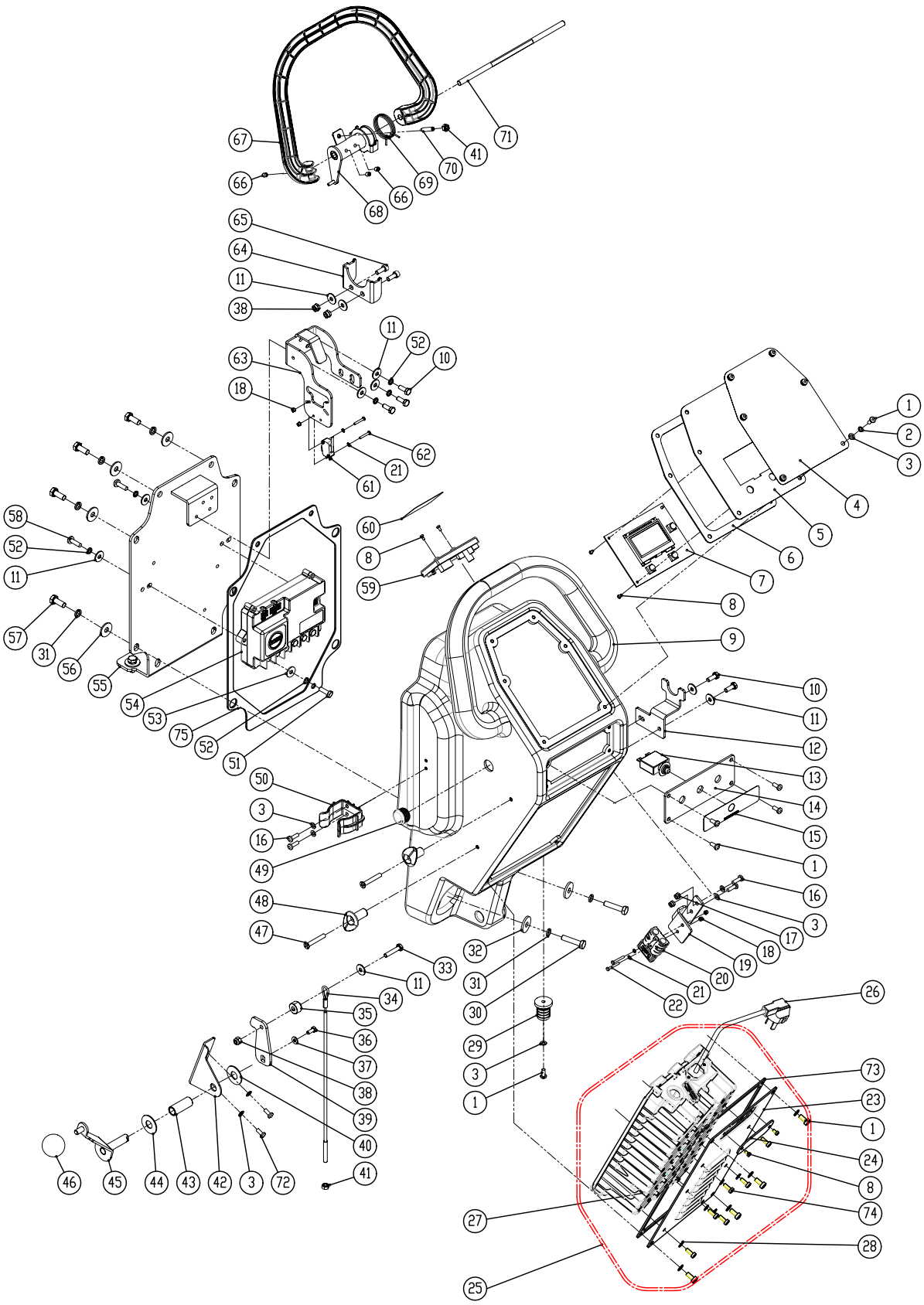

CONTROL CONSOLE GROUP (i20NBL)

DIA NO.	PART NUMBER	DESCRIPTION	SERIAL NUMBER	NO REQ'D
1	1221512	SCREW M5×12		19
2	1422513	LOCK WASHER M5		6
3	1421510	FLAT WASHER M5×∮10×1.0		13
4	8134725	CONTROL PANEL DECAL, i20NBL		1
5	8134721	CONTROL PANEL, i20NBL		1
6	8134015	GASKET		1
7	8134732	CONTROL PANEL PCB, i20NBL (LI / EN)		1
8	1221306	SCREW M3×6		7
9	8134005	CONTROL HOUSING		1
10	1021616	HEX BOLT M6 X 16		5
11	1421618	PLAIN WASHER M6×∮18×1.6,SS		10
12	8114008	BRACKET, SQGE STORAGE		1
13	8310740	CIRCUIT BREAKER, 5A		1
14	8134006	PLATE, CIRCUIT BREAKERS MNTG		1
15	8144025	LABEL, CIRCUIT BREAKER		1
16	1221515	PH SCREW M5×15		4
17	1123507	LOCK NUT M5		6
18	1123305	LOCK NUT M3		4
19	8113010	BRACKET, CONNECTOR MTG		1
20	8134750	CONNECTOR, GRID, BLUE		1
21	1434300	LOCK WASHER, TOOTH, M3		4
22	1211325	SCREW M3×25		2
23	8134060	PLATE, ON BOARD BATTERY CHARGER		1
24	8134061	CLEAR COVER		1
25	8630032	LITHIUM BATTERY CHARGER KIT		1
26	8112030	BATTERY CHARGER POWER CORD, KIT, US		1
27	8630032	ON BOARD BATTERY CHARGER, 380W		1
28	1421409	FLAT WASHER, M4×∮9×0.8		6
29	8114005	CONNECTOR		1

CONTROL CONSOLE GROUP

DIA NO.	PART NUMBER	DESCRIPTION	SERIAL NUMBER	NO REQ'D
30	1021840	HEX BOLT M8×40		2
31	1422821	LOCK WASHER M8		12
32	1421828	FLAT WASHER M8×ϕ28×3		2
33	1021630	HEX HEAD BOLT M6×30,SS		1
34	8134082	CABLE, SQGE LIFT		1
35	8014101	LIFTING ROPE SPACER		1
36	1021610	HEX HEAD BOLT M6×10,SS		1
37	1421616	FLAT WASHER M6×ϕ16×1.0		1
38	1123608	LOCK NUT M6		3
39	8014012	BAFFLE		1
40	8113111	NYLON FLAT WASHER ϕ12.9×ϕ25.4×0.8		1
41	1121605	HEX NUT M6		2
42	8134501	BRACKET		1
43	8134081	SLEEVEE		1
44	1421132	FLAT WASHER M12×ϕ32×1.5		1
45	8134080	SQUEEGEE LIFTING HANDLE		1
46	8113104	BALL KNOB M8		1
47	1222641	SUNK HEAD SCREW M6 X 40		2
48	8210112	HOOK, POWER CORD		2
49	7000318	PLUG(ROUNG PLUG)		1
50	6210120	CLAMP, DRAIN HOSE		1
51	1023612	HEX BOLT M6 X 12, COPPER		6
52	1422616	LOCK WASHER, M6		11
53	1423612	FLAT WASHER M6× ϕ12×1, COPPER		6
54	8134790	MAIN CONTROLLER, i20NB		1
55	8134070	REAR PLATE, CONTROL CONSOLE		1
56	1421824	FLAT WASHER M8× ϕ24×2		10
57	1021820	HEX BOLT M8×20		10
58	1221620	PH SCREW M6 X 20		2
59	8134775	RFID BOARD		1
60	8134035	LABEL, i-SYNERGY™ CARD SCANNING		1
61	8114712	MICRO SWITCH		1
62	1021320	SCREW M3 X 20		2
63	8134022	BRACKET,SWITCH		1
64	8114402	BRACKET, SPRING		1
65	1521616	SCREW M6X16, HEX SCOKET		2
66	1534608	SET SCREW M6 ×8		4

CONTROL CONSOLE GROUP

DIA NO.	PART NUMBER	DESCRIPTION	SERIAL NUMBER	NO REQ'D
67	8134300	LEVER, BAIL		1
68	8114300	ACTUATOR		1
69	8114306	SPRING		1
70	1535630	SET SCREW M6 ×30		1
71	8114101	SHAFT		1
72	1021512	HEX HEAD BOLT M5×12,SS		2
73	8134083	CHARGER PLATE GASKET		1
74	1221412	SCREW M4×12		6
75	8134085	CONTROL HOUSING GASKET		1

NOTES:
DIA NO 49：Structure optimization.
DIA NO 23、25、26、27、28、74：Charger supplier replacement relates to part replacement, of which 7000819 is to replace old charger component 8134600-US.
DIA NO 73、75：Design optimization of new parts.

CONTROL CONSOLE GROUP (i20NBTL/i24BTL)

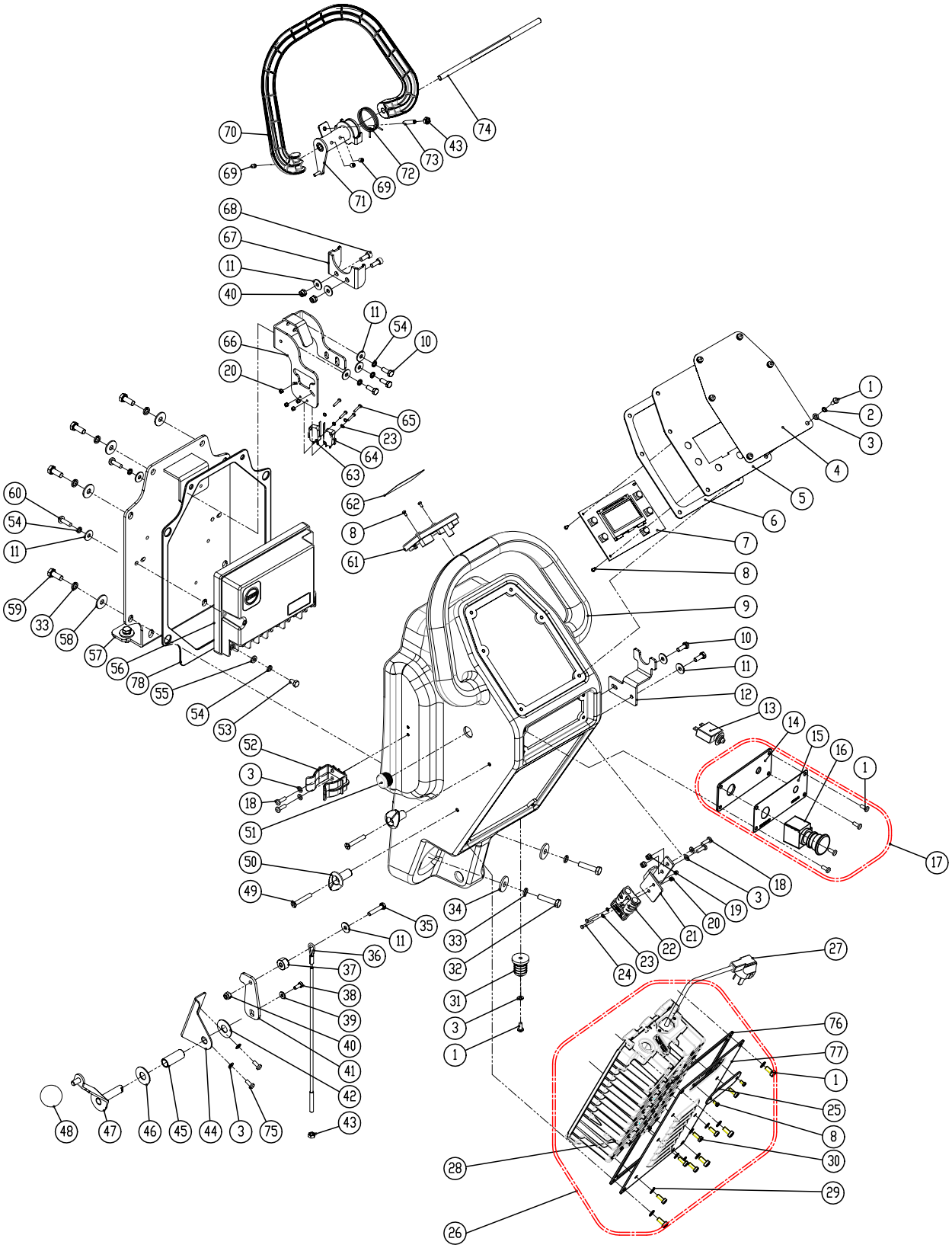

CONTROL CONSOLE GROUP (i20NBTL/i24BTL)

DIA NO.	PART NUMBER	DESCRIPTION	SERIAL NUMBER	NO REQ'D
1	1221512	SCREW M5×12		19
2	1422513	LOCK WASHER M5		6
3	1421510	FLAT WASHER M5×∮10×1.0		13
4	8144726	CONTROL PANEL DECAL, i20NBTL		1
	8144727	CONTROL PANEL DECAL, i24BTL		1
5	8144721	CONTROL PANEL, i20NBTL		1
6	8134015	GASKET		1
7	8144793	CONTROL PANEL PCB, i20NBTL (LI / EN)		1
8	1221306	SCREW M3×6		7
9	8134005	CONTROL HOUSING		1
10	1021616	HEX BOLT M6 X 16		5
11	1421618	PLAIN WASHER M6×∮18×1.6,SS		10
12	8114008	BRACKET, SQGE STORAGE		1
13	8310740	CIRCUIT BREAKER, 5A		1
14	8134007	BASE, EMERGENCY STOP SWITCH		1
15	8144027	LABEL, EMERGENCY STOP SWITCH		1
16	8310707	BUTTON,EMERGENCY STOP		1
17	8144750	EMERGENCY STOP SWITCH KIT		1
18	1221515	PH SCREW M5×15		4
19	1123507	LOCK NUT M5		6
20	1123305	LOCK NUT M3		6
21	8113010	BRACKET, CONNECTOR MTG		1
22	8134750	CONNECTOR, GRID, BLUE		1
23	1434300	LOCK WASHER, TOOTH, M3		6
24	1211325	SCREW M3×25		2
25	8134061	CLEAR COVER		1
26	8630032	LITHIUM BATTERY CHARGER KIT		1
27	8112030	BATTERY CHARGER POWER CORD, KIT, US		1
28	8630032	ON BOARD BATTERY CHARGER, 380W		1
29	1421409	FLAT WASHER, M4×∮9×0.8		6

CONTROL CONSOLE GROUP (i20NBTL/i24BTL)

DIA NO.	PART NUMBER	DESCRIPTION	SERIAL NUMBER	NO REQ'D
30	1221412	SCREW M4×12		1
31	8114005	CONNECTOR		1
32	1021840	HEX BOLT M8×40		2
33	1422821	LOCK WASHER M8		12
34	1421828	FLAT WASHER M8×∮28×3		2
35	1021630	HEX HEAD BOLT M6×30,SS		1
36	8134082	CABLE, SQGE LIFT		1
37	8014101	LIFTING ROPE SPACER		1
38	1021610	HEX HEAD BOLT M6×10,SS		1
39	1421616	FLAT WASHER M6×∮16×1.0		1
40	1123608	LOCK NUT M6		3
41	8014012	BAFFLE		1
42	8113111	NYLON FLAT WASHER ∮12.9×∮25.4×0.8		1
43	1121605	HEX NUT M6		3
44	8134501	BRACKET		1
45	8134081	SLEEVEE		1
46	1421132	FLAT WASHER M12×∮32×1.5		1
47	8134080	SQUEEGEE LIFTING HANDLE		1
48	8113104	BALL KNOB M8		1
49	1222641	SUNK HEAD SCREW M6 X 40		2
50	8210112	HOOK, POWER CORD		2
51	7000318	PLUG(ROUNG PLUG)		1
52	6210111	CLAMP, DRAIN HOSE		1
53	1023612	HEX BOLT M6 X 12, COPPER		10
54	1222641	SUNK HEAD SCREW M6 X 40		2
55	1422616	FLAT WASHER M6× ∮12×1, COPPER		10
56	8144790	MAIN CONTROLLER, i20NBT		1
57	8134070	REAR PLATE, CONTROL CONSOLE		1
58	1421824	FLAT WASHER M8× ∮24×2		10
59	1021820	HEX BOLT M8×20		10
60	1221620	PH SCREW M6×20		2
61	8134775	RFID BOARD		1
62	8134035	LABEL, i-SYNERGY™ CARD SCANNING		1
63	8114712	MICRO SWITCH (2 TERMINAL)		1
64	8124743	MICRO SWITCH (3 TERMINAL)		1
65	1021320	SCREW M3 X 20		4
66	8134022	BRACKET,SWITCH		1

CONTROL CONSOLE GROUP (i20NBTL/i24BTL)

DIA NO.	PART NUMBER	DESCRIPTION	SERIAL NUMBER	NO REQ'D
67	8114402	BRACKET, SPRING		1
68	1521616	SCREW M6X16, HEX SCOKET		2
69	1534608	SET SCREW M6 ×8		4
70	8134300	LEVER, BAIL		1
71	8114300	ACTUATOR		1
72	8114306	SPRING		1
73	1535630	SET SCREW M6 ×30		2
74	8114101	SHAFT		1
75	1021512	HEX HEAD BOLT M5×12,SS		2
76	8134083	CHARGER PLATE GASKET		1
77	8134066	PLATE, ON BOARD BATTERY CHARGER		1
78	8134085	CONTROL HOUSING GASKET		1

NOTES:
DIA NO 25、26、27、28、29、30、77：Charger supplier replacement relates to part replacement, of which 7000819 is to replace old charger component 8134600-US.
DIA NO 61：Design improvement,the new design can fit old machine.
DIA NO 76、78：Design optimization of new parts.

FRAME & WHEEL GROUP (i20NBL)

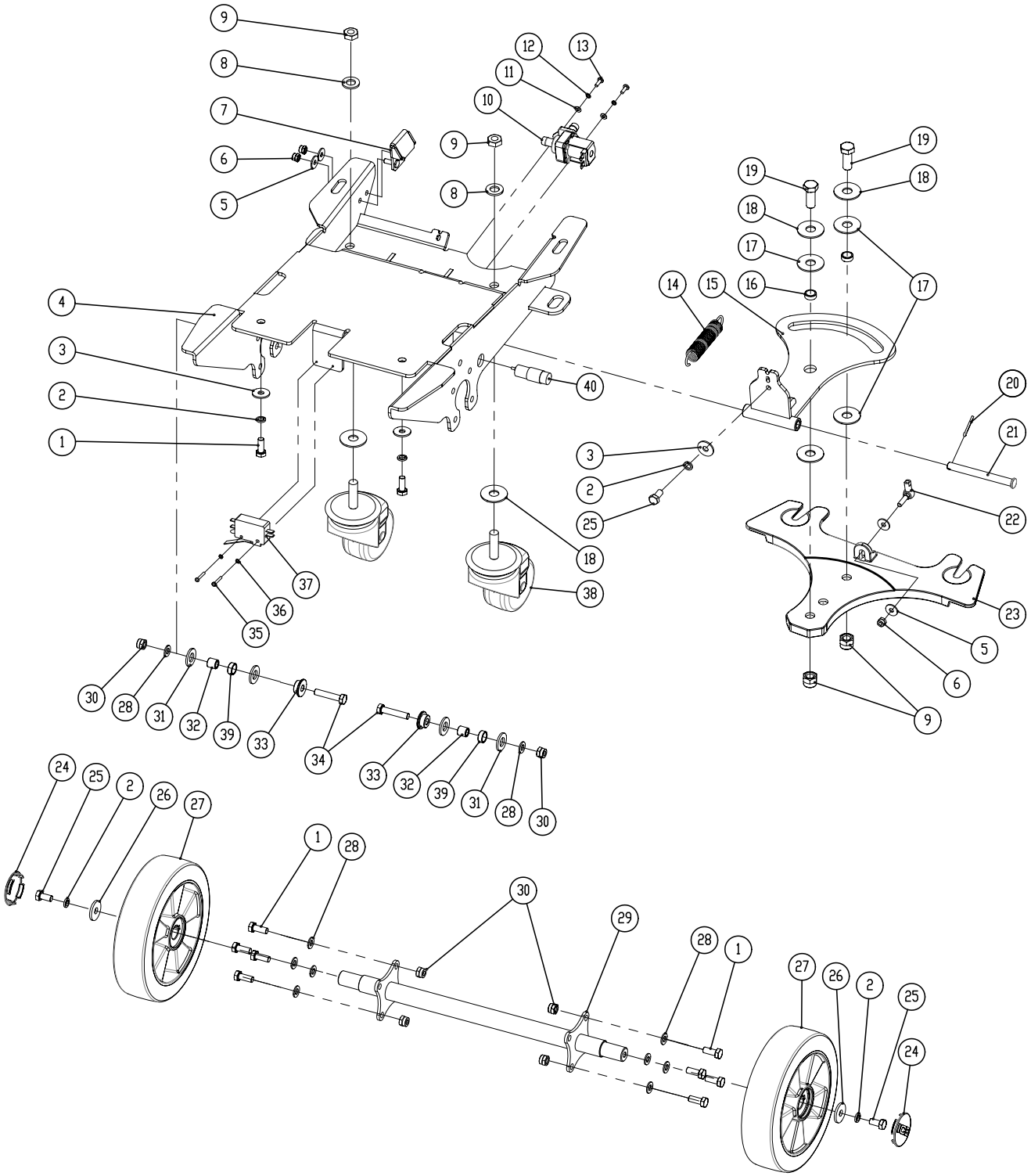

FRAME & WHEEL GROUP (i20NBL)

DIA NO.	PART NUMBER	DESCRIPTION	SERIAL NUMBER	NO REQ'D
1	1021820	HEX BOLT M8×20		12
2	1422821	LOCK WASHER M8		7
3	1421824	FLAT WASHER M8×ϕ24×2		5
4	8145100	MAIN FRAME		1
5	1421618	FLAT WASHER M6×ϕ18×1.6		4
6	1123608	LOCK NUT M6		3
7	8115300	BRACKET, PEDAL LOCKING		1
8	1421124	FLAT WASHER M12×ϕ24×2.5		4
9	1123115	LOCK NUT M12		4
10	8119003	SOLENOID VALVE, 24VDC		1
11	1421409	FLAT WASHER M4×ϕ9×0.8		2
12	1422411	LOCK WASHER M4		2
13	1221412	SCREW M4×12		4
14	8115004	SPIRNG		1
15	8135010	BRACKET, SQGE LIFT		1
16	8115005	AXLE SLEEVE		2
17	8135001	PLASTIC THRUST WASHER M12×ϕ 30×1.5		4
18	1421132	FLAT WASHER M12×ϕ32×1.5		4
19	1021230	HEX BOLT M12 × 30		2
20	1645324	COTTER 3.2 × 24		1
21	8115003	PIN		1
22	8114511	BALL JOINT M6		1
23	8115001	BRACKET, SQGE MNTG		1
24	8115203	COVER, WHEEL		2
25	1021816	HEX BOLT M8 ×16		3
26	1421828	FLAT WASHER M8×ϕ28×3		2
27	8115200	WHEEL, 8 INCH		2
	1612607	BALL BEARING, 6004LU		4
28	1421816	FLAT WASHER M8×ϕ16×1.6		10
29	8135405	SHAFT		1
30	1123810	LOCK NUT M8		10
31	8117007	NYLON WASHER ϕ12.9×ϕ24×2.5		4
32	8115404	BEARING, JOURNAL		2
33	8145001	BUSHING		2
34	1021840	HEX BOLT M8 ×40		2
35	1211325	SCREW M3×25		2
36	1434300	LOCK WASHER, TOOTH, M3		2
37	8014071	MICRO SWITCH 20A		1
38	8115500	CASTER, SWIVEL, 80MM		2
39	8115405	SLEEVE, P/M		2
40	8134709A	PROXIMITY SENSOR, KIT		1

FRAME & TRANSAXLE GROUP (i20NBTL/i24BTL)

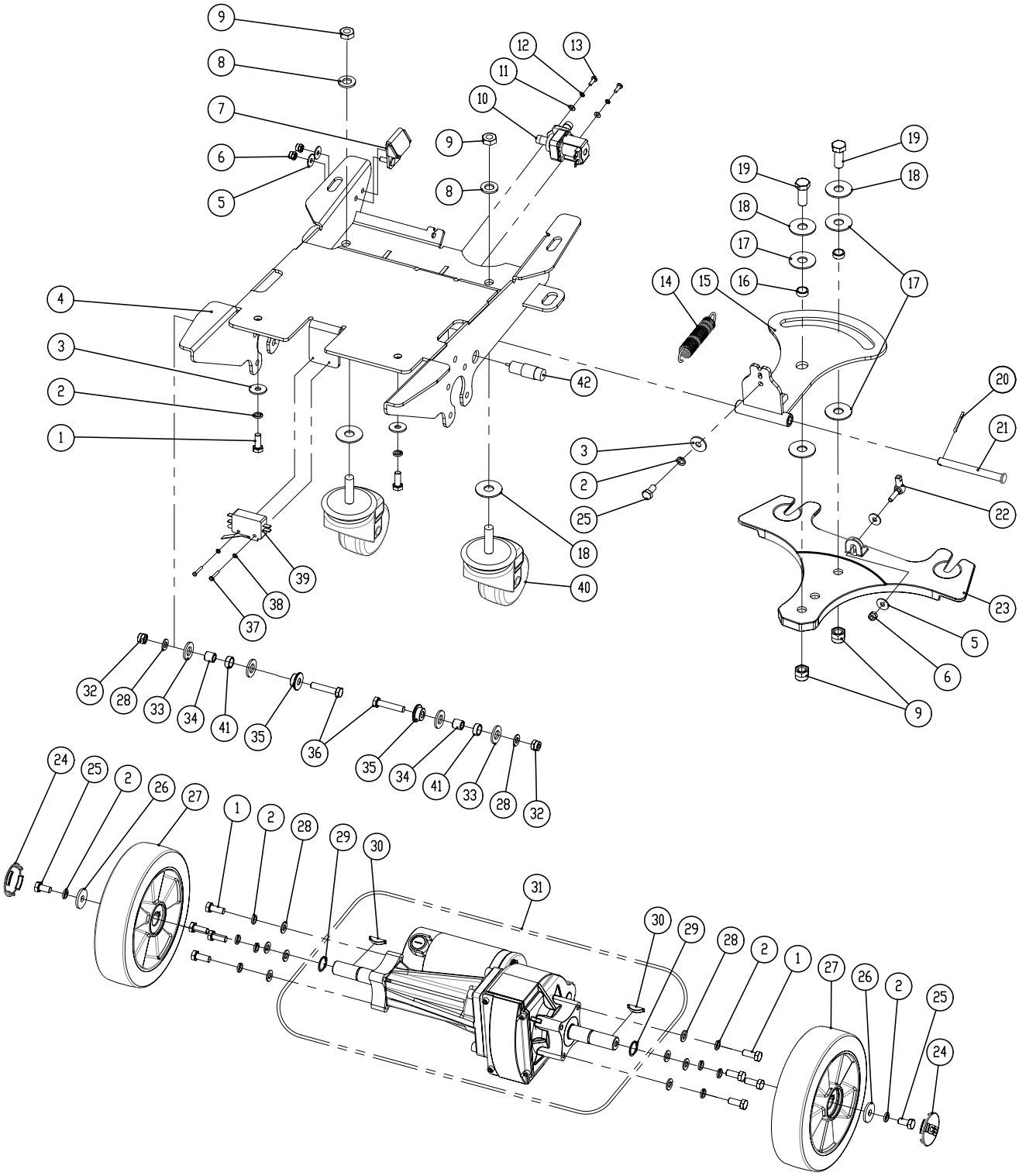

FRAME & TRANSAXLE GROUP (i20NBTL/i24BTL)

DIA NO.	PART NUMBER	DESCRIPTION	SERIAL NUMBER	NO REQ'D
1	1021820	HEX BOLT M8×20		12
2	1422821	LOCK WASHER M8		15
3	1421824	FLAT WASHER M8×∮24×2		5
4	8145100	MAIN FRAME		1
5	1421618	FLAT WASHER M6×∮18×1.6		4
6	1123608	LOCK NUT M6		3
7	8115300	BRACKET, PEDAL LOCKING		1
8	1421124	FLAT WASHER M12×∮24×2.5		4
9	1123115	LOCK NUT M12		4
10	8119003	SOLENOID VALVE, 24VDC		1
11	1421409	FLAT WASHER M4×∮9×0.8		2
12	1422411	LOCK WASHER M4		2
13	1221412	SCREW M4×12		4
14	8115004	SPIRNG		1
15	8135010	BRACKET, SQGE LIFT		1
16	8115005	AXLE SLEEVE		2
17	8135001	PLASTIC THRUST WASHER M12×∮ 30×1.5		4
18	1421132	FLAT WASHER M12×∮32×1.5		4
19	1021230	HEX BOLT M12 × 30		2
20	1645324	COTTER 3.2 × 24		1
21	8115003	PIN		1
22	8114511	BALL JOINT M6		1
23	8115001	BRACKET, SQGE MNTG		1
24	8115203	COVER, WHEEL		2
25	1021816	HEX BOLT M8×16		3
26	1421828	FLAT WASHER M8×∮28×3		2
27	8125200	WHEEL, 8 INCH		2
28	1421816	FLAT WASHER M8×∮16×1.6		10
29	1436019	RETAINING RING 19		2
30	8125403	WOODRUFF KEY		2
31	8125410	TRANSAXLE, KIT		1
	8116011	CARBON BRUSH, DRIVE MOTOR		2
32	1123810	LOCK NUT M8		10
33	8117007	NYLON WASHER ∮12.9×∮24×2.5		4
34	8115404	BEARING, JOURNAL		2
35	8145001	BUSHING		2
36	1021840	HEX BOLT M8 ×40		2
37	1211325	SCREW M3×25		2
38	1434300	LOCK WASHER, TOOTH, M3		2
39	8014071	MICRO SWITCH 20A		1
40	8115500	CASTER, SWIVEL, 80MM		2
41	8115405	SLEEVE, P/M		2
42	8134709A	PROXIMITY SENSOR, KIT		1

SCRUB HEAD GROUP (i20NBL / i20NBTL)

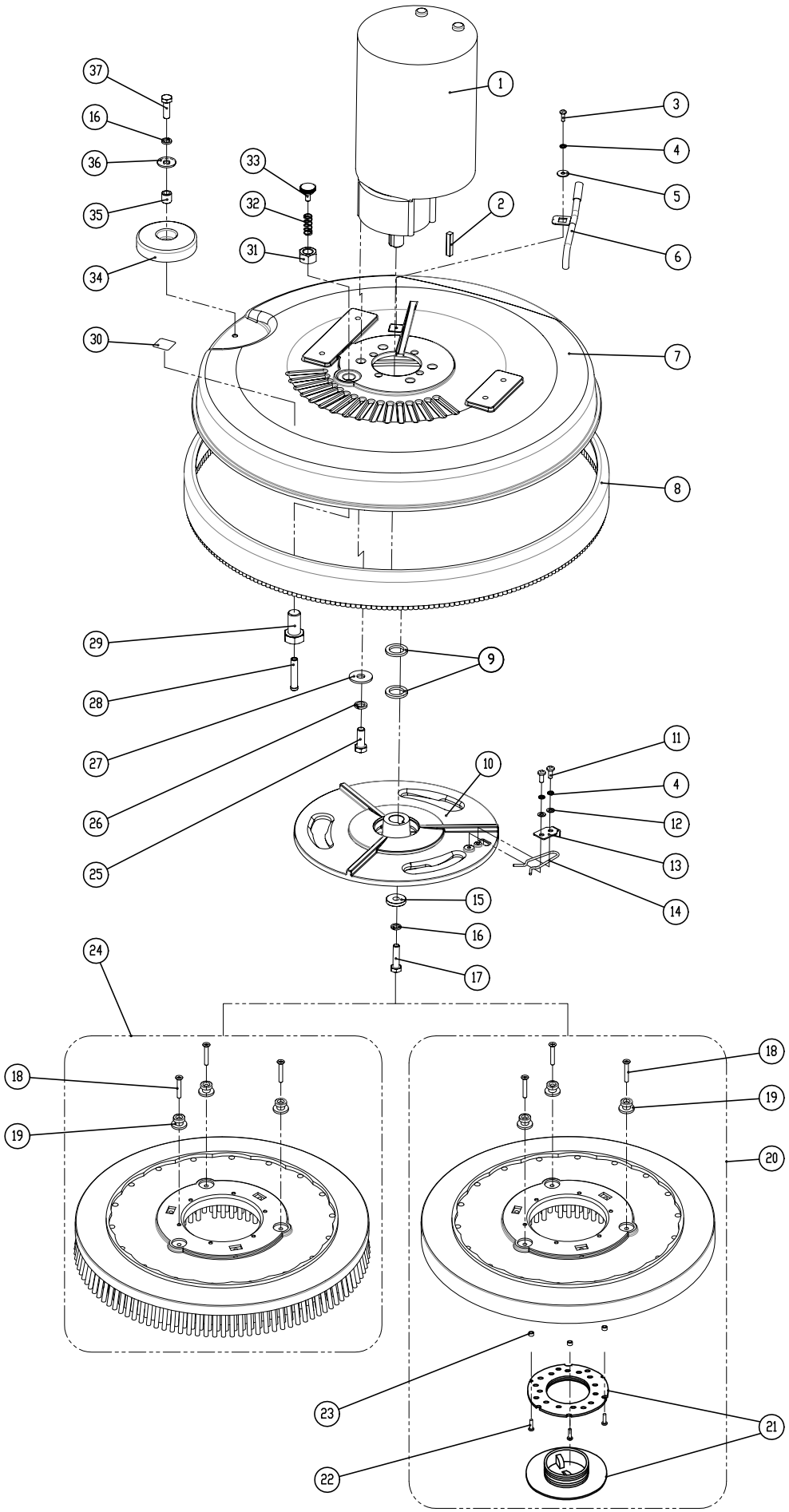

SCRUB HEAD GROUP (i20NBL / i20NBTL)

DIA NO.	PART NUMBER	DESCRIPTION	SERIAL NUMBER	NO REQ'D
1	8116200	BRUSH MOTOR, 24VDC 1.0HP, KIT		1
	8116007	BRUSH MOTOR CARBON BRUSH		2
2	1656433	KEY		1
3	1221412	SCREW M4×12		1
4	1422513	LOCK WASHER M5		3
5	1421518	FLAT WASHER M5×∮18×2		1
6	8116100	WATER SUPPLY TUBE		1
7	8116006	SCRUB HEAD HOUSING		1
8	8116020	BUMPER, SCRUB HEAD		1
9	8116001	SPACER		2
10	8116008	HUB, DRIVE, 3 LUG		1
11	1221512	SCREW M5×12		2
12	1421510	FLAT WASHER M5×∮10×1		2
13	8116002	BRUSH CLAMP PLATE		1
14	8116003	SPRING CLIP		1
15	8116010	FLAT WASHER ∮8.5×∮25.4×4.5		1
16	1422821	LOCK WASHER M8		2
17	1023815	HEX BOLT 5/16-18 ×1.5" UNC		1
18	1222635	SCREW, M6X35		6
19	8116030	STUD		6
20	9040019	19" PAD DRIVER		1
	9040019K	19" PAD DRIVER WITH LOK 3 (OPTION)		1
21	9000001	BIG MOUTH		1
	9000003	CENTER-LOK 3 (OPTION)		1
22	1321325	SELF-TAPPING SCREW, ST4.8X25		3
23	8116040	SPACER		3
24	9050020	20" BRUSH, 0.7mm PP BRISTLE (OPTION)		1
	9050020E	20" BRUSH, 0.5mm PP BRISTLE (OPTION)		1
25	1023010	HEX BOLT 3/8-16 ×1" UNC		4
26	1422026	LOCK WASHER M10		4
27	1421030	FLAT WASHER M10× ∮30×2.5		4
28	8116202	PIN		1
29	8116205	SCREW M14 × 20		1
30	8111023	WARNING LABEL		1
31	1121913	HEX NUT M14		1
32	8116204	SRPING		1
33	8116210	KNOB M6		1
34	8116009	PROTECTIVE WHEEL		1
35	8115404	SLEEVE, P/M		1
36	1421824	FLAT WASHER M8×∮24×2.0		1
37	1021825	HEX BOLT M8×25		1

ORBITAL HEAD GROUP (i20NBTL-OB)

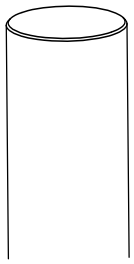

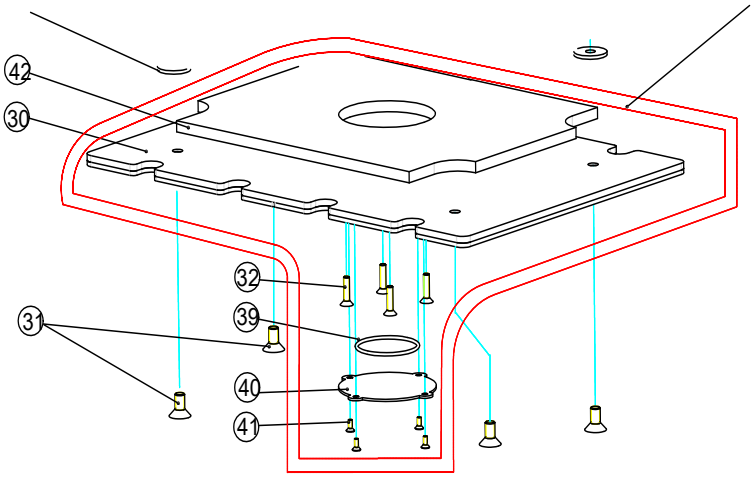

ORBITAL HEAD GROUP (i20NBTL-OB)

DIA NO.	PART NUMBER	DESCRIPTION	SERIAL NUMBER	NO REQ'D
1	8146199	MOTOR, 24VDC 550W 2200RPM, KIT		1
	8146198	CARBON BRUSH, MOTOR		2
2	8146110	KEY, 8×7×28		1
3	1123012	LOCK NUT, M10		16

ORBITAL HEAD GROUP (i20NBTL-OB)

DIA	PART		SERIAL	NO

SCRUB HEAD GROUP (i24BTL)

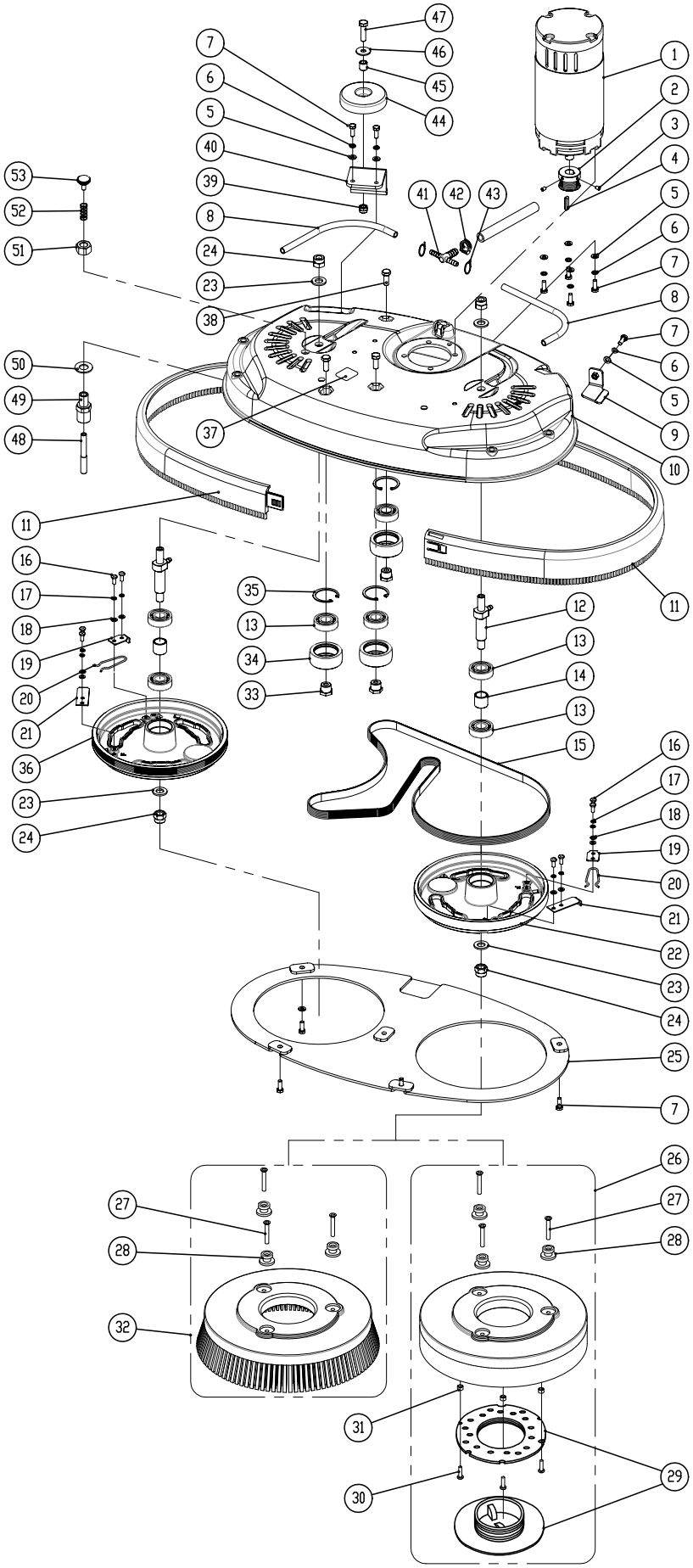

SCRUB HEAD GROUP (i24BTL)

DIA NO.	PART NUMBER	DESCRIPTION	SERIAL NUMBER	NO REQ'D
1	8126200	BRUSH MOTOR, 24VDC 680W 2000RPM, KIT		1
	8126070	CARBON BRUSH, BRUSH MOTOR		2
2	8126006	SHEAVE, SS		1
3	1534508	SCREW, SET, M5X8		2
4	1655025	KEY, 5X5X25		1
5	1421612	FLAT WASHER M6×∮12×1.6		7
6	1422616	LOCK WASHER, M6		7
7	1021616	HEX BOLT M6×16		12
8	8119301	TUBING, ID=6mm, L=250mm		2
9	8126007	BRACKET, GUIDE, BELT		1
10	8126002	SCRUB HEAD HOUSING		1
11	8126050	BUMPER, SCRUB HEAD		2
12	8126040	SHAFT, PULLY		2
13	1612203	BEARING, 6203RS		7
14	8126008	BUSHING		2
15	8126005	BELT, 6PJ1598		1
16	1221512	SCREW M5×12		8
17	1422513	LOCK WASHER M5		8
18	1421510	FLAT WASHER M5×∮10×1		8
19	8116002	BRUSH CLAMP PLATE		2
20	8116003	SPRING CLIP		2
21	8126009	PLATE, CLAMP, BRUSH		2
22	8126004	HUB, DRIVER, 3LUG, PULLY		1
23	1421124	FLAT WASHER M12×∮24×2.5		4
24	1123115	LOCK NUT M12		4
25	8126020	BRACKET, GUARD, SPLASH		1
26	9040011U	11" PAD DRIVER		2
	9050012U	12" BRUSH, MEDIUM DUTY (OPTION)		2
27	1222635	SCREW, M6X35		12
28	8116030	STUD		12
29	9000001	BIG MOUTH		2
	9000003	CENTER-LOK 3 (OPTION)		2
30	1321325	SELF-TAPPING SCREW, ST4.8X25		6
31	8116040	SPACER		6
32	9050012	12" BRUSH (OPTION)		2
33	8126032	SPACER, IDLER		3
34	8126031	PULLEY, IDLER		3
35	1437040	RING, RETAINING, 40		3
36	8126003	HUB, DRIVE, 3LUG, 6GRV		1
37	8111023	WARNING LABEL		1
38	1021820	HEX BOLT M8×20		3
39	1123810	LOCK NUT M8		1
40	8126012	BRACKET, WALL-ROLLER		1
41	8119004	FITTING, PLASTIC, TEE		1
42	1962016	CLAMP, 10-16mm		1
43	1914300	TIE, NYLON, 5X300		2
44	8116009	PROTECTIVE WHEEL		1
45	8115404	SLEEVE, P/M		1
46	1421824	FLAT WASHER M8×∮24×2.0		1
47	1021825	HEX BOLT M8×25		1
48	8126202	PIN		1
49	8126205	GUIDE, M14X20		1
50	1421428	FLAT WASHER M14×∮28×2.0		1
51	1121913	NUT M14		1
52	8116204	SPRING		1
53	8116210	KNOB M6		1

SCRUB HEAD LIFT GROUP (i20NBL / i20NBTL)

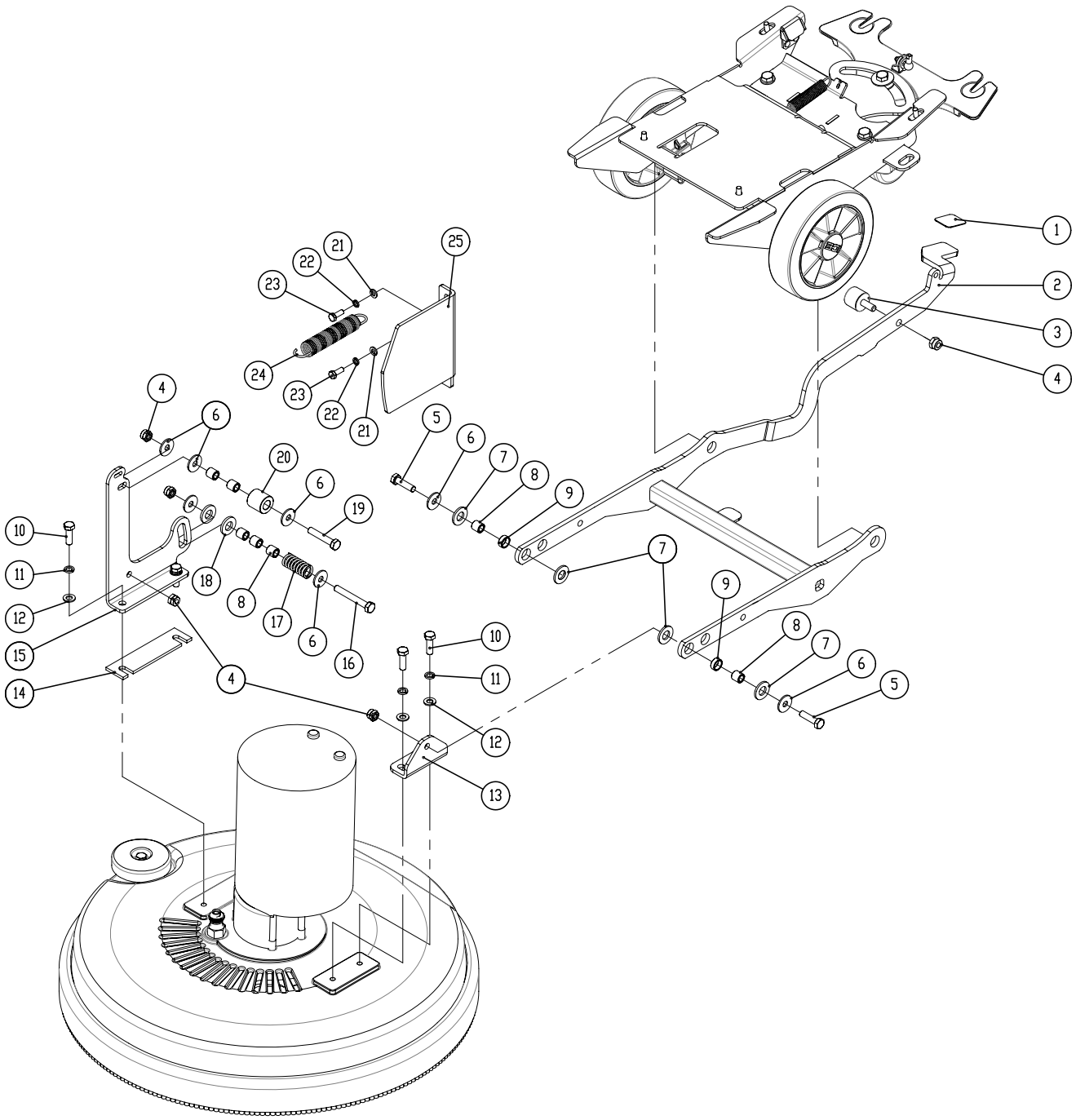

SCRUB HEAD LIFT GROUP (i20NBL / i20NBTL)

DIA NO.	PART NUMBER	DESCRIPTION	SERIAL NUMBER	NO REQ'D
1	8137006	NON-SLIP MAT		1
2	8137100	BRACKET, SCRUB HEAD LIFT		1
3	8133151	BUMPER		1
4	1123810	LOCK NUT M8		5
5	1021830	HEX BOLT M8×30		2
6	1421824	FLAT WASHER M8×ϕ24×2		6
7	8117007	NYLON WASHER ϕ12.9×ϕ24×2.5		4
8	8115404	BEARING, JOURNAL		7
9	8115405	SLEEVE, P/M		2
10	1021825	HEX BOLT M8×25		4
11	1422821	LOCK WASHER M8		4
12	1421816	FLAT WASHER M8×ϕ16×1.6		4
13	8117002	LEFT BRACKET		1
14	8117005	SPACER(I20NB)		1
15	8117003	RIGHT BRACKET		1
16	1022860	HEX BOLT M8 × 60		1
17	8117008	SPRING		1
18	8113109	BEARING, THRUST		2
19	1022845	HEX BOLT M8 × 45		1
20	8117004	ROLLER		1
21	1421612	FLAT WASHER M6×ϕ12×1.6		2
22	1422616	LOCK WASHER M6		2
23	1021616	HEX BOLT M6 × 16		2
24	8117009	SPRING		1
25	8117001	BRACKET, GUIDE		1

ORBITAL HEAD LIFT GROUP (i20NBTL-OB)

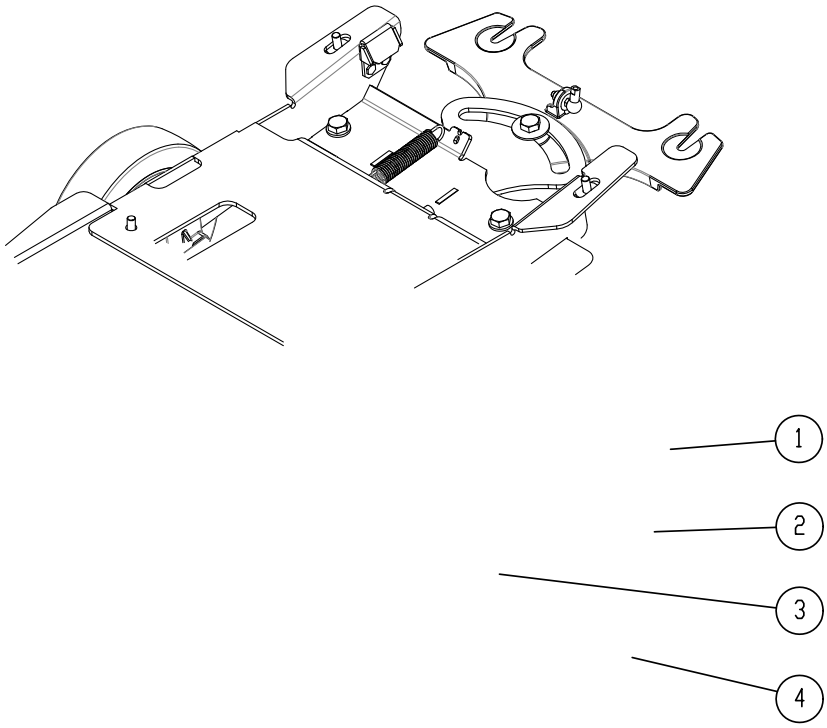

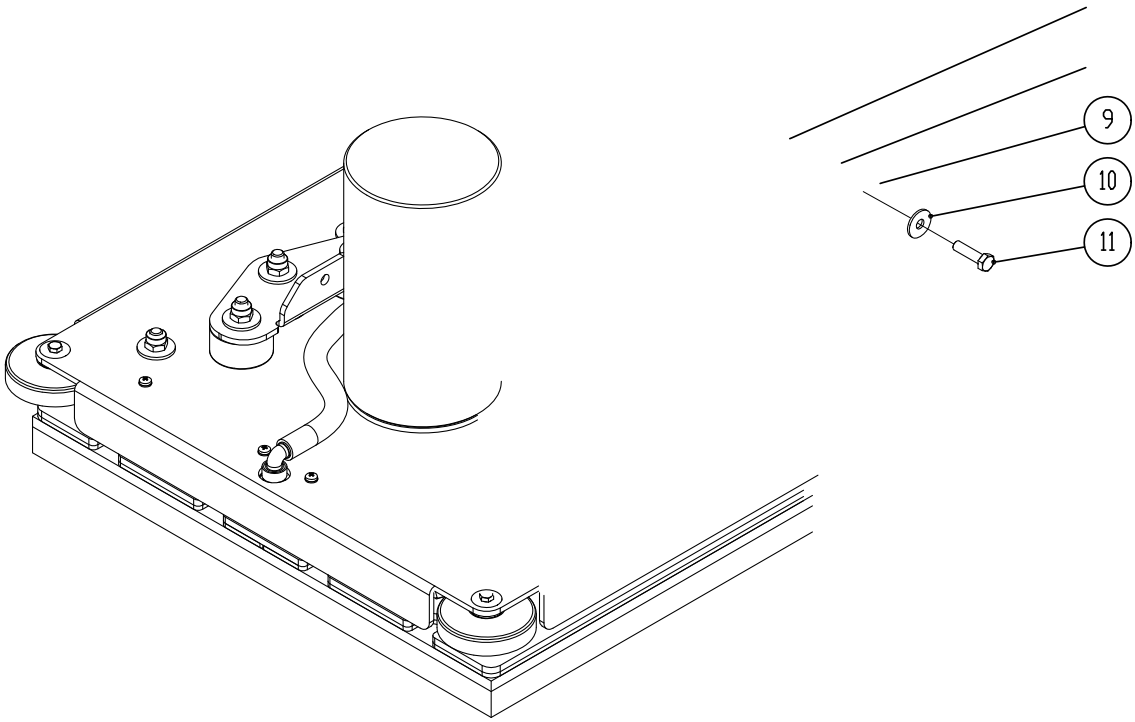

ORBITAL HEAD LIFT GROUP (i20NBTL-OB)

DIA NO.	PART NUMBER	DESCRIPTION	SERIAL NUMBER	NO REQ'D
1	8137006	NON-SLIP MAT		1
2				
3				
4				
5				
6				
7				
8				
9				
10				
11				
12				

SCRUB HEAD LIFT GROUP (i24BTL)

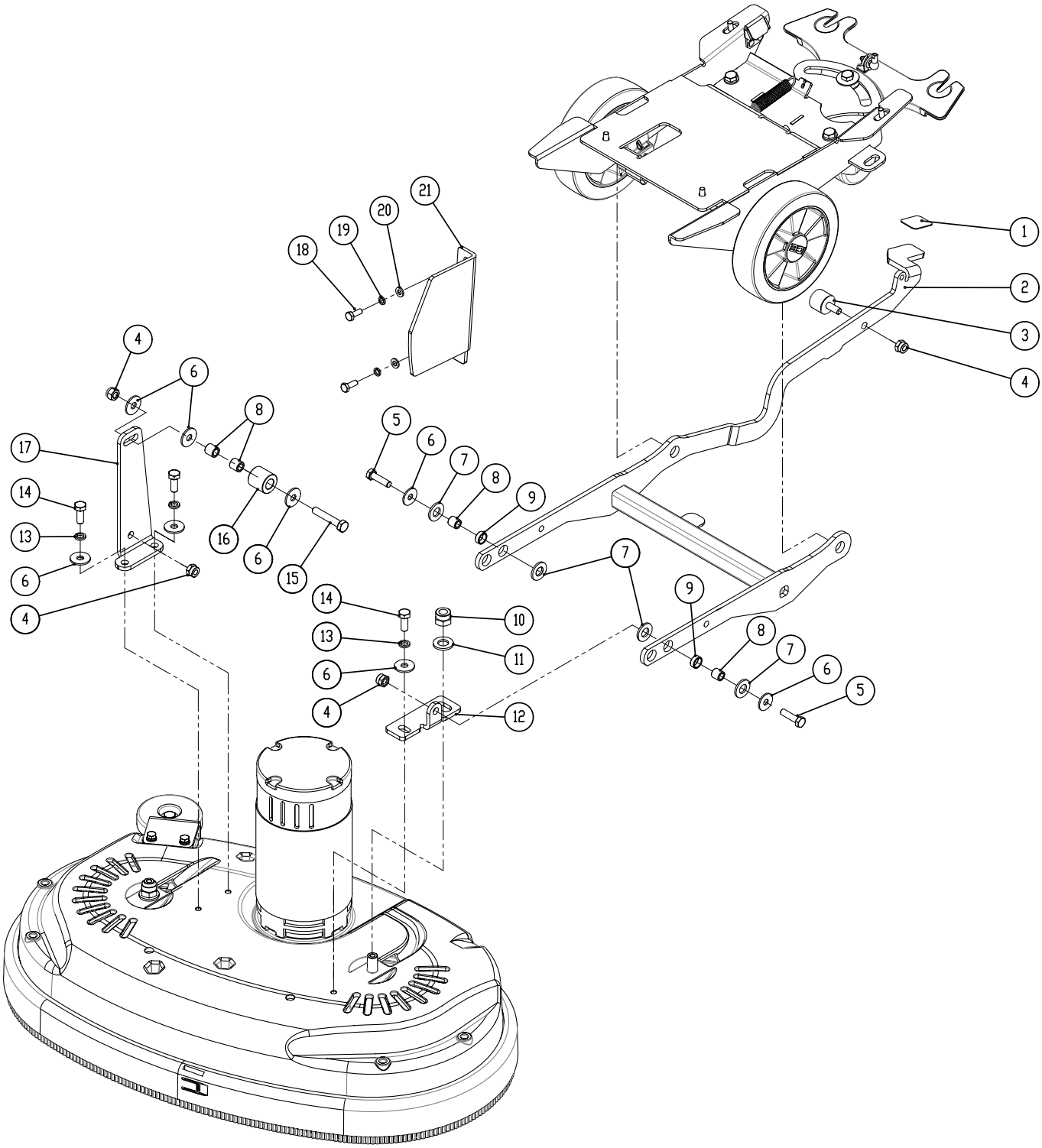

SCRUB HEAD LIFT GROUP (i24BTL)

DIA NO.	PART NUMBER	DESCRIPTION	SERIAL NUMBER	NO REQ'D
1	8137006	NON-SLIP MAT		1
2	8137100	BRACKET, SCRUB HEAD LIFT		1
3	8133151	BUMPER		1
4	1123810	LOCK NUT M8		5
5	1021830	HEX BOLT M8×30		2
6	1421824	FLAT WASHER M8×ϕ24×2		8
7	8117007	NYLON WASHER ϕ12.9×ϕ24×2.5		4
8	8115404	BEARING, JOURNAL		4
9	8115405	SLEEVE, P/M		2
10	1123115	LOCK NUT M12		1
11	1421124	FLAT WASHER M12×ϕ24×2.5		1
12	8126011	LEFT BRACKET		1
13	1422821	LOCK WASHER M8		3
14	1021820	HEX BOLT M8 × 20		3
15	1022845	HEX BOLT M8 × 45		1
16	8117004	ROLLER		1
17	8126010	RIGHT BRACKET		1
18	1021616	HEX BOLT M6 × 16		2
19	1422616	LOCK WASHER M6		2
20	1421612	FLAT WASHER M6×ϕ12×1.6		2
21	8137001	BRACKET, GUIDE		1

SQUEEGEE GROUP

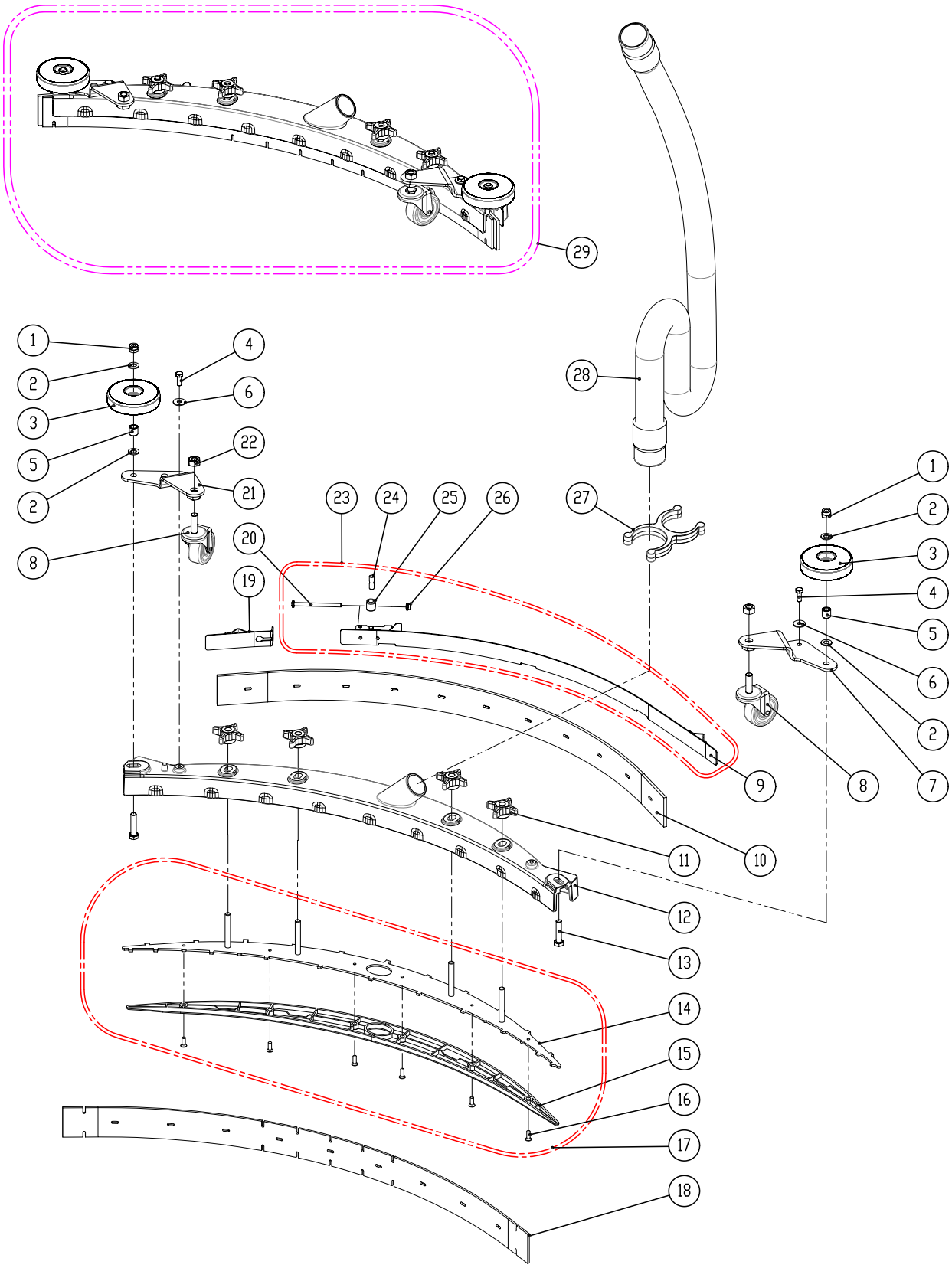

SQUEEGEE GROUP

DIA NO.	PART NUMBER	DESCRIPTION	SERIAL NUMBER	NO REQ'D
1	1123810	LOCK NUT M8		2
2	1421824	FLAT WASHER M8×ϕ24×2.0		4
3	8116009	PROTECTIVE WHEEL		2
4	1021616	HEX BOLT M6×16		2
5	8115404	BEARING, JOURNAL		2
6	1421612	FLAT WASHER M6×ϕ12×1.6		2
7	8118300	LEFT BRACKET		1
8	8118401	CASTER, 2 INCH		2
9	8118600	CLAMP ASSEMBLY, SQUEEGEE		1
10	8118022	SQUEEGEE BLADE, REAR, LINATEX		1
	8118002	SQUEEGEE BLADE, REAR, PU (OPTION)		1
11	8118003	STAR KNOB M8		4
12	8118004	SQUEEGEE HOUSING		1
13	1021835	HEX BOLT M8×35		2
14	8118009	STAINLESS STELL RETAINER,SQUEEGEE		1
15	8118008	PLASTIC SPACER		1
16	1222515	COUNTERSUNK FLAT HEAD SCREW M5×15		6
17	8118010	RETAINER KIT		1
18	8118021	SQUEEGEE BLADE, FRONT, LINATEX		1
	8118001	SQUEEGEE BLADE, FRONT, PU (OPTION)		1
19	8118610	SHORT CLAMP ASSEBLY		1
20	1221575	SCREW M5×75		1
21	8118200	RIGHT BRACKET		1
22	1121008	HEX NUT M10		2
23	8118600A	CLAMP ASSEMBLY		1
24	8118624	SHAFT		1
25	8118623	SPACER		1
26	1123507	LOCK NUT M5		1
27	8118109	HOLDER VACUUM HOSE		1
28	8118006	VACUUM HOSE		1
29	8118050	SQUEEGEE ASSEMBLY		1
	8118051	SQUEEGEE ASSEMBLY, PU (OPTION)		1

SOLUTION GROUP

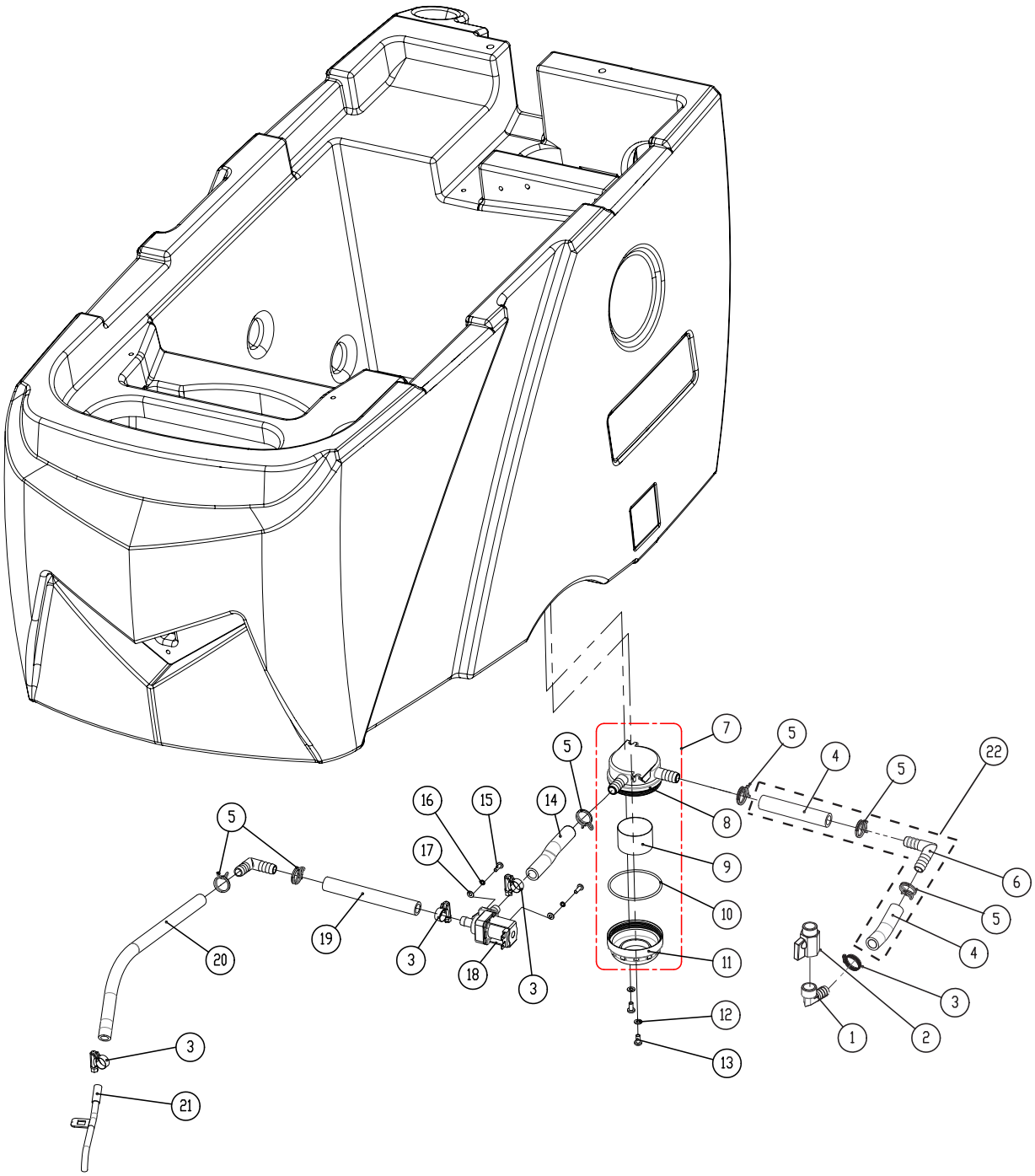

SOLUTION GROUP

DIA NO.	PART NUMBER	DESCRIPTION	SERIAL NUMBER	NO REQ'D
1	8119007	ELBOW G1/2		1
2	8119005	BALL VALVE, G1/2		1
3	1962016	CLAMP, 10-16mm		4
4	8119201	TUBING ID=12MM L=70MM		2
5	8119006	CLAMP		6
6	8119002	ELBOW, TUBING BARB		2
7	8119200	FILTER ASSEMBLY		1
8	8119101	BASE, FILTER ASSEMBLY		1
9	8119104	SCREEN, FILTER, 40 MESH (OPTION)		1
10	1623660	O RING		1
11	8119102	CAP, FILTER ASSEMBLY		1
12	1421510	FLAT WASHER M5× ∮10×1		2
13	1221512	SCREW M5×12		2
14	8119202	TUBING ID=12MM L=100MM		1
15	1221412	SCREW M4×12		2
16	1422411	LOCK WASHER M4		2
17	1421409	FLAT WASHER M4× ∮ 9×0.8		2
18	8119003	SOLENOID VALVE,24VDC		1
19	8119203	TUBING ID=12MM L=135MM		1
20	8119204	TUBING ID=10MM L=360MM		1
21	8116100	WATER SUPPLY TUBE		1
22	8119009	TUBING ASSEMBLY		1

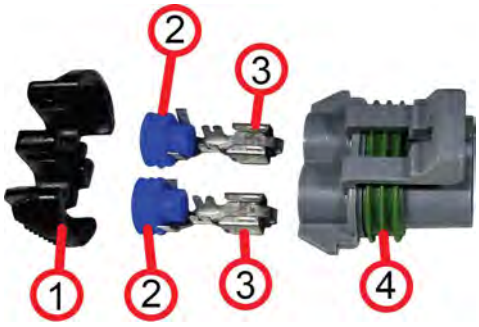

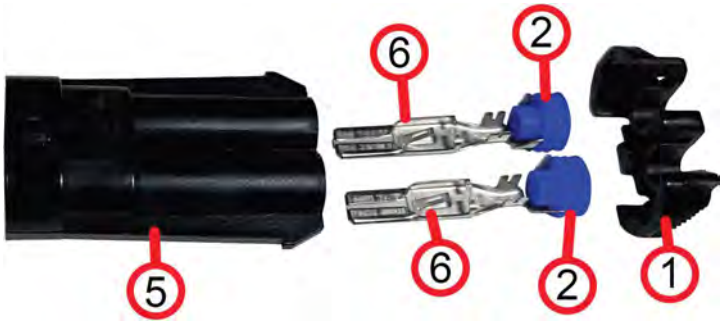

CONNECTOR DIAGRAM

DIA NO.	PART NUMBER	DESCRIPTION	NO REQ'D
1	1883036	CLIP FOR CONNECTOR HOUSING	2
2	1883041	RUBBER GROMMENT	4
3	1883039	FEMALE PIN	2
4	1883037	CONNECTOR HOUSING	1
5	1883038	CONNECTOR HOUSING	1
6	1883040	MALE PIN	2

CONNECTOR DIAGRAM

DIA NO.	PART NUMBER	DESCRIPTION	NO REQ'D
1	1883046	CLIP FOR CONNECTOR HOUSING	2
2	1883052	FEMALE PIN	2
3	1883044	CONNECTOR HOUSING	1
4	1883045	CONNECTOR HOUSING	1
5	1883043	MALE PIN	2

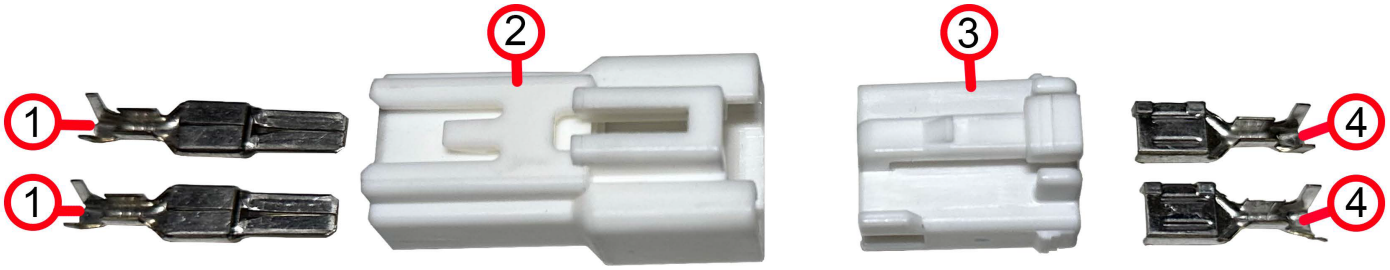

CONNECTOR DIAGRAM

DIA NO.	PART NUMBER	DESCRIPTION	NO REQ'D
1	1883014	MALE PIN	2
2	1883012	CONNECTOR HOUSING	1
3	1883013	CONNECTOR HOUSING	1
4	1883015	FEMALE PIN	2

WEAR AND TEAR PARTS

DIA NO.	PART NUMBER	DESCRIPTION	SERIAL NUMBER	NO REQ'D
1	8115200	WHEEL, 8 INCH, i20NBL		2
	1612607	BEARING, BALL, 6004, 8"WHEEL		4
	8125200	WHEEL, 8 INCH, i20NBTL / i24BTL		2
2	8116009	PROTECTIVE WHEEL		3
3	8118021	SQUEEGEE BLADE, FRONT, LINATEX		1
4	8118022	SQUEEGEE BLADE, REAR, LINATEX		1
5	9050020	20" BRUSH,MEDIUM DUTY ,i20NBL/NBTL		1
	9050020E	20" BRUSH,BLUE BRISTLE,SOFT TO MEDIUM ,i20NBL/NBTL(OPTIONAL)		1
	9040019	19" PAD HOLDER, i20NBL/NBTL		2
	9040019K	19" PAD HOLDER, i20NBL/NBTL WITH LOK-3 (OPTIONAL)		1
6	9050012P-A	12" BRUSH, SOFT WHITE , i24BTL		2
	9040011K	11" PAD HOLDER WITH LOK-3 (OPTIONAL		2
	9040011U	11" PAD HOLDER, i24BTL		2
	9050012U	12" BRUSH,MEDIUM DUTY, i24BTL (OPTIONAL)		2

WIRING DIAGRAM（i20NBL）

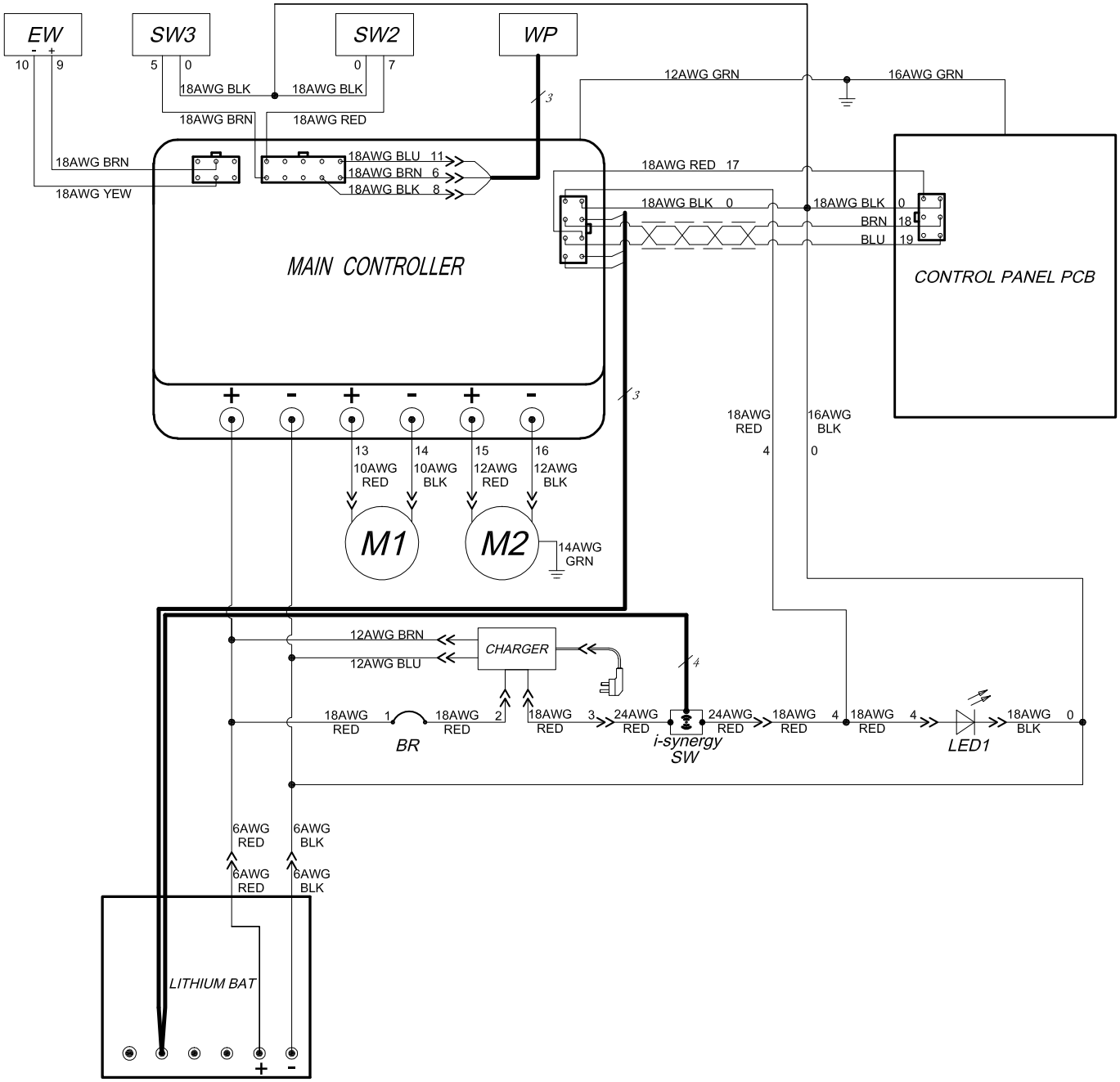

LITHIUM BAT: Lithium-ion Batteries
BR: Main controller circuit breaker, 5A
i-synergy SW: i-synergy starting up switch
LED1: Running lights
CHARGER: On board battery charger
M1: Brush motor
M2: Vacuum motor

MAIN CONTROLLER: Main controller
CONTROL PANEL PCB: Control panel PCB
EW: Solution solenoid valve switch
SW3: Control handle start bail switch
SW2: Safe switch, Scrub head lifting
WP: Proximity switch

WIRING DIAGRAM（i20NBTL, i20NBTL-OB & i24BTL）

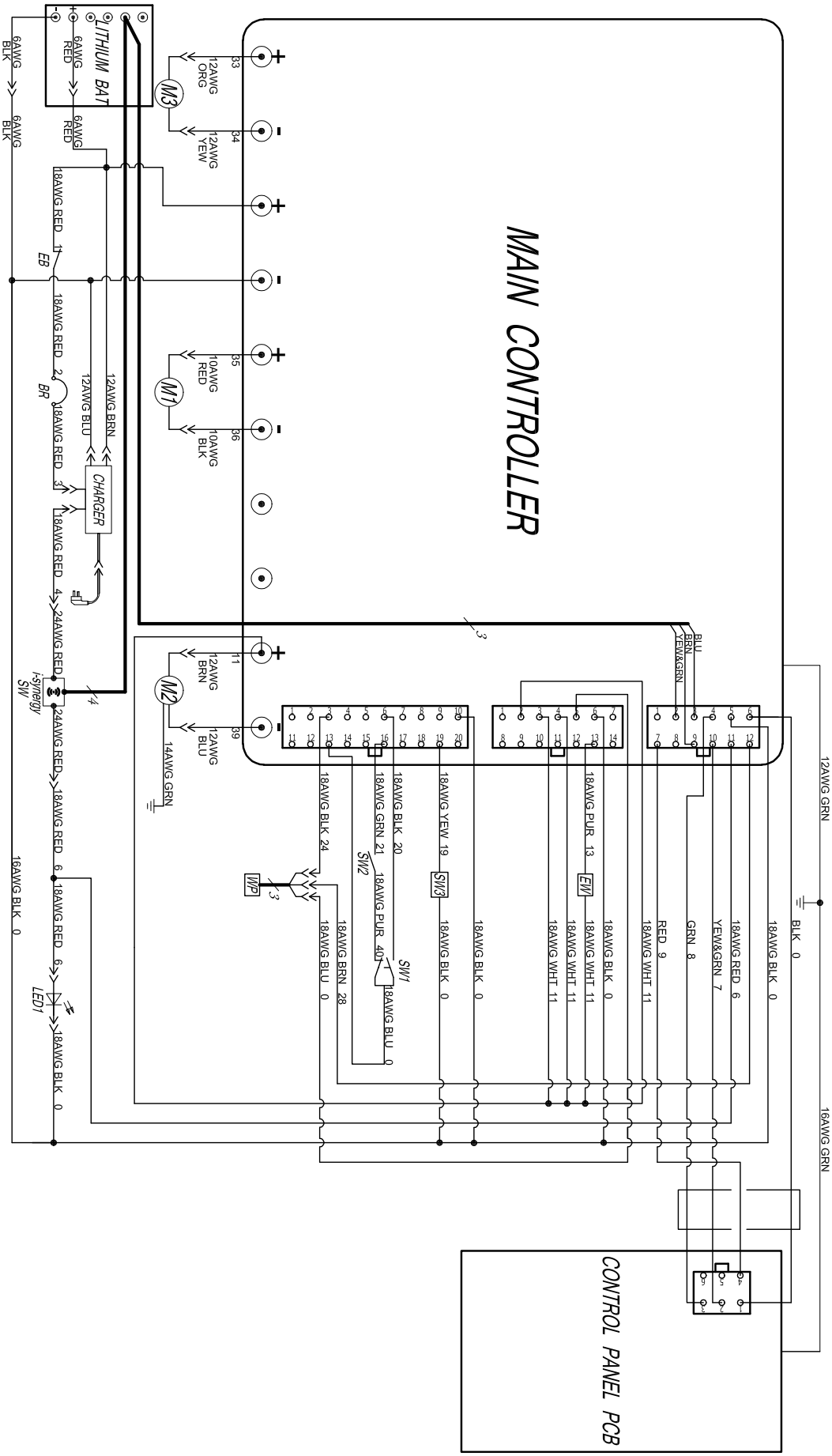

LITHIUM BAT: Lithium-ion Batteries
BR: Main controller circuit breaker
i-synergy SW: i-synergy starting switch
LED1: Running light
CHARGER: On board battery charger
M3: Transaxle motor
M1: Brush motor
M2: Vacuum motor
WP: Proximity switch

SW2: Control handle bail switch, backward
SW1: Control handle bail switch, forward
SW3: Safe switch, scrub head lifting
EB: Emergency stop button
EW: Solution solenoid valve switch
MAIN CONTROLLER: Main controller
CONTROL PANEL PCB: Control panel PCB